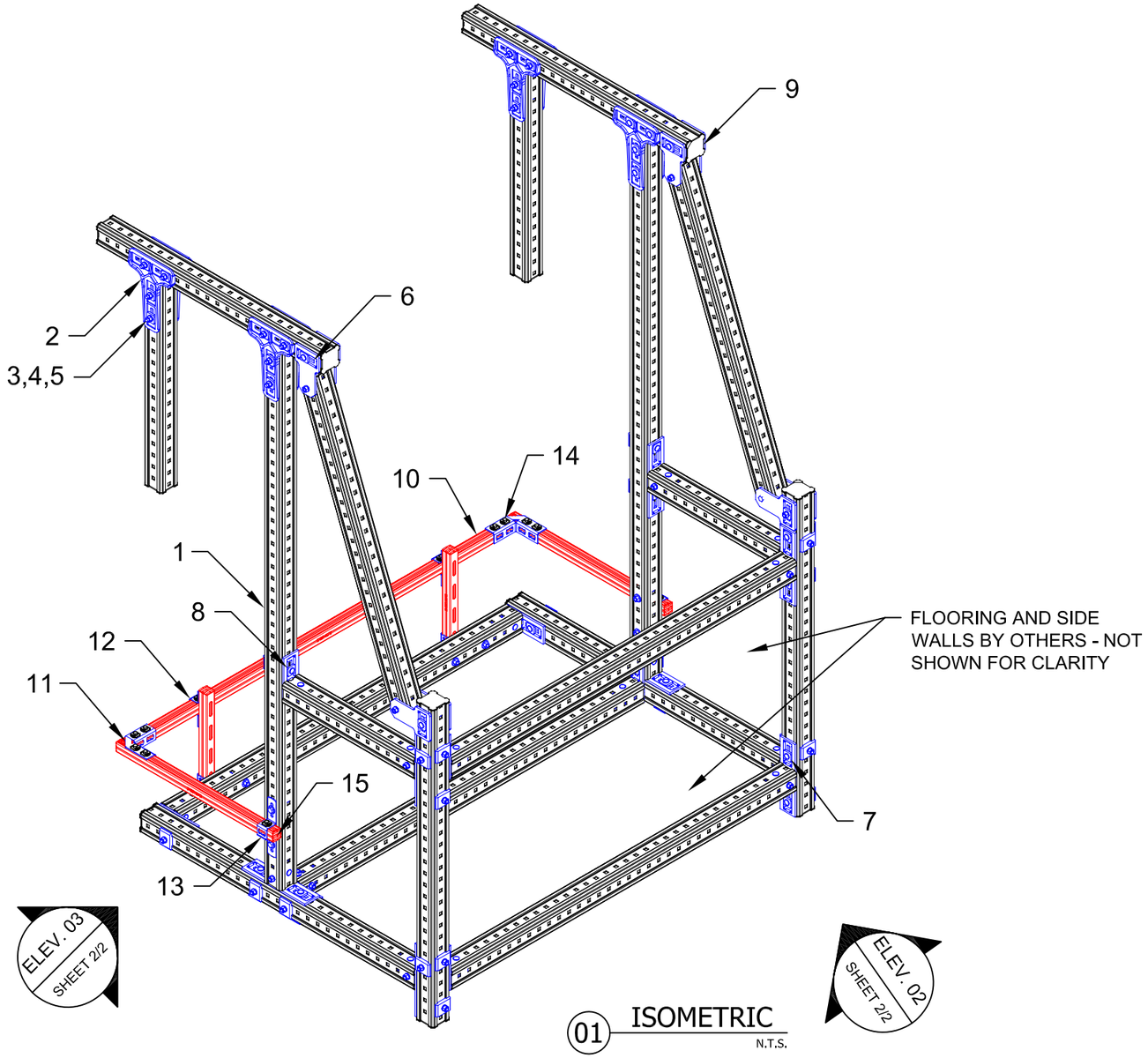

01 ISOMETRIC
N.T.S.

No.	Unit Qty	Unit	Description	Box Qty	# Boxes Needed	Item No.
1	AS REQ'D	EA	GIRDER MI-90 3M	1	AS REQ'D	304798
2	8	PR	CONNECTOR MIC-90-LH	3	3	2048107
3	16	EA	TOOTHED PLATE MIA-TP	20	1	305707
4	16	EA	MI HEX NUT M12-F-SL-WS 3/4"	100	1	382897
5	16	EA	EASYHAND SCREW MIA-EH90	10	2	304887
6	4	PR	CONNECTOR MIC-U-MA	2	2	304806
7	8	EA	CONNECTOR MIC-90-L	2	4	304805
8	8	EA	CONNECTOR MIC-90-U	4	2	304803
9	10	EA	GIRDER END CAP MIA-EC90	25	1	432077
10	AS REQ'D	EA	STRUT HS-158-12/PG 10'	1	AS REQ'D	407555
11	2	EA	8-HOLE ANGLE MQW-8/90	10	1	369659
12	2	EA	CLAMP MQB-41	10	1	369668
13	4	EA	CONNECTOR MIC-MI/MQ-X	16	1	304881
14	18	EA	CHANNEL CONNECTOR MQN	50	1	369623
15	16	EA	CHANNEL END CAP MEK RED	50	1	244886

NOTE(S):

1. PRELIMINARY, NOT FOR CONSTRUCTION
2. DESIGN ASSUMPTIONS:
   a. NO LOADS CONSIDERED - CONCEPT ONLY
   b. LATERAL LOADS NOT CONSIDERED
   c. BUILDING CODE:NOT SPECIFIED
   d. CORROSION RESISTANCE REQD.: NOT SPECIFIED
2. REFER TO COMPONENT MANUFACTURER'S IFUs FOR REQUIRED INSTALLATION INFO.
3. E.O.R. MUST BE NOTIFIED OF ANY DEVIATIONS FROM EXISTING/ NEW SUBSTRATE CONDITIONS SHOWN HEREIN TO VALIDATE ACCEPTANCE OF THIS HILTI DESIGN PRIOR TO INSTALLATION.

All loading and design criteria supplied by customer is assumed accurate. Only the stated Design Assumptions were considered, and must be verified by the responsible Engineer of Record (EOR). The basis of Hilti component and connection design is the published data in the current Hilti Technical Guide, including material and cross-section properties, allowable load values, factors of safety, methods of calculation, and limiting factors. The EOR must verify suitability for any specific application, and the capacity of the supportive structure to receive the shown configuration and associated reaction loads. Modification to components and/or design may alter performance and must be evaluated by the EOR.

PROJECT NAME:

PLATFORM

SERVICE REQUEST DESCRIPTION:

BRACED CANTILEVER

DESIGNED BY:	REVIEWED BY:
VAM	MES
DRAWN BY:	ISSUE DATE:
BAP	25 FEB 15

REVISIONS:

NO:	DESCRIPTION:	DATE:
A	ORIGINAL ISSUE	25 FEB 15

SERVICE REQUEST NUMBER:

PL - BC01 - N/A

DRAWING NUMBER:	SHEET:
01	1/2

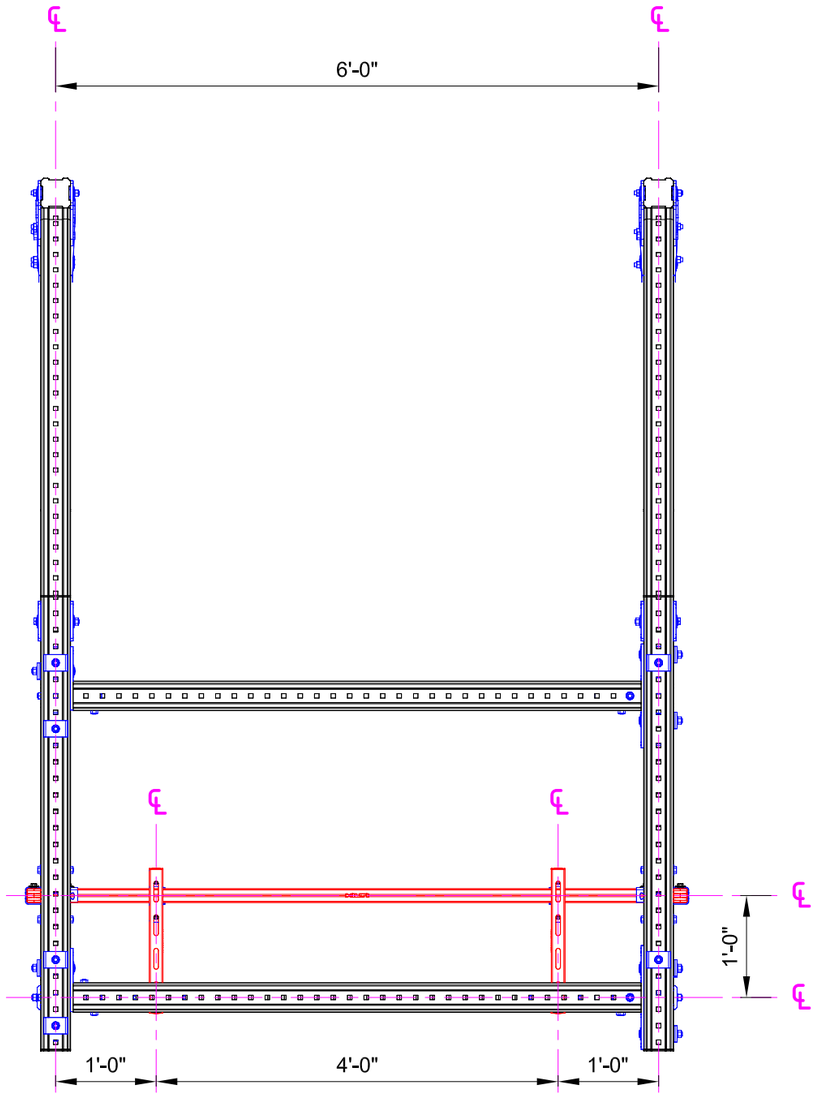

02 ELEVATION
N.T.S.

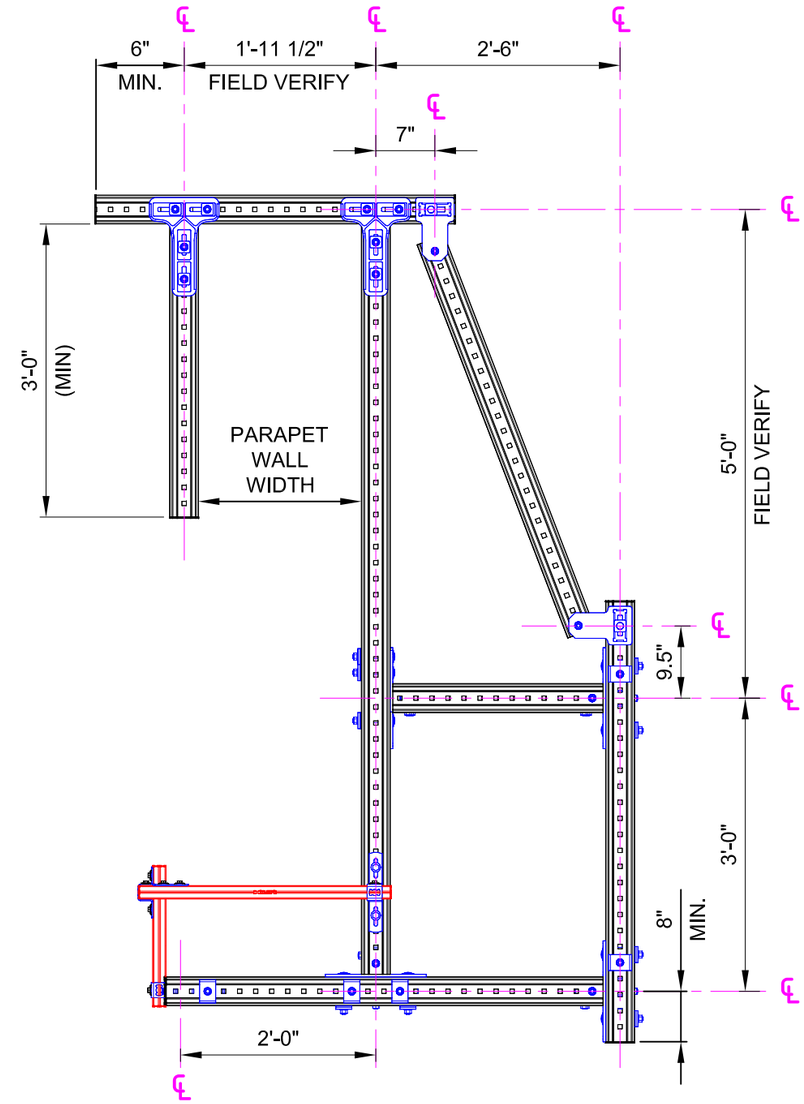

03 ELEVATION
N.T.S.

NOTE(S):
1. REFER TO SHEET 1 FOR APPLICABLE NOTE(S).

All loading and design criteria supplied by customer is assumed accurate. Only the stated Design Assumptions were considered, and must be verified by the responsible Engineer of Record (EOR). The basis of Hilti component and connection design is the published data in the current Hilti Technical Guide, including material and cross-section properties, allowable load values, factors of safety, methods of calculation, and limiting factors. The EOR must verify suitability for any specific application, and the capacity of the supportive structure to receive the shown configuration and associated reaction loads. Modification to components and/or design may alter performance and must be evaluated by the EOR.

PROJECT NAME:

PLATFORM

SERVICE REQUEST DESCRIPTION:

BRACED CANTILEVER

DESIGNED BY:	REVIEWED BY:
VAM	MES
DRAWN BY:	ISSUE DATE:
BAP	25 FEB 15

REVISIONS:

NO:	DESCRIPTION:	DATE:
A	ORIGINAL ISSUE	25 FEB 15

SERVICE REQUEST NUMBER:

PL - BC01 - N/A

DRAWING NUMBER:	SHEET:
01	2/2

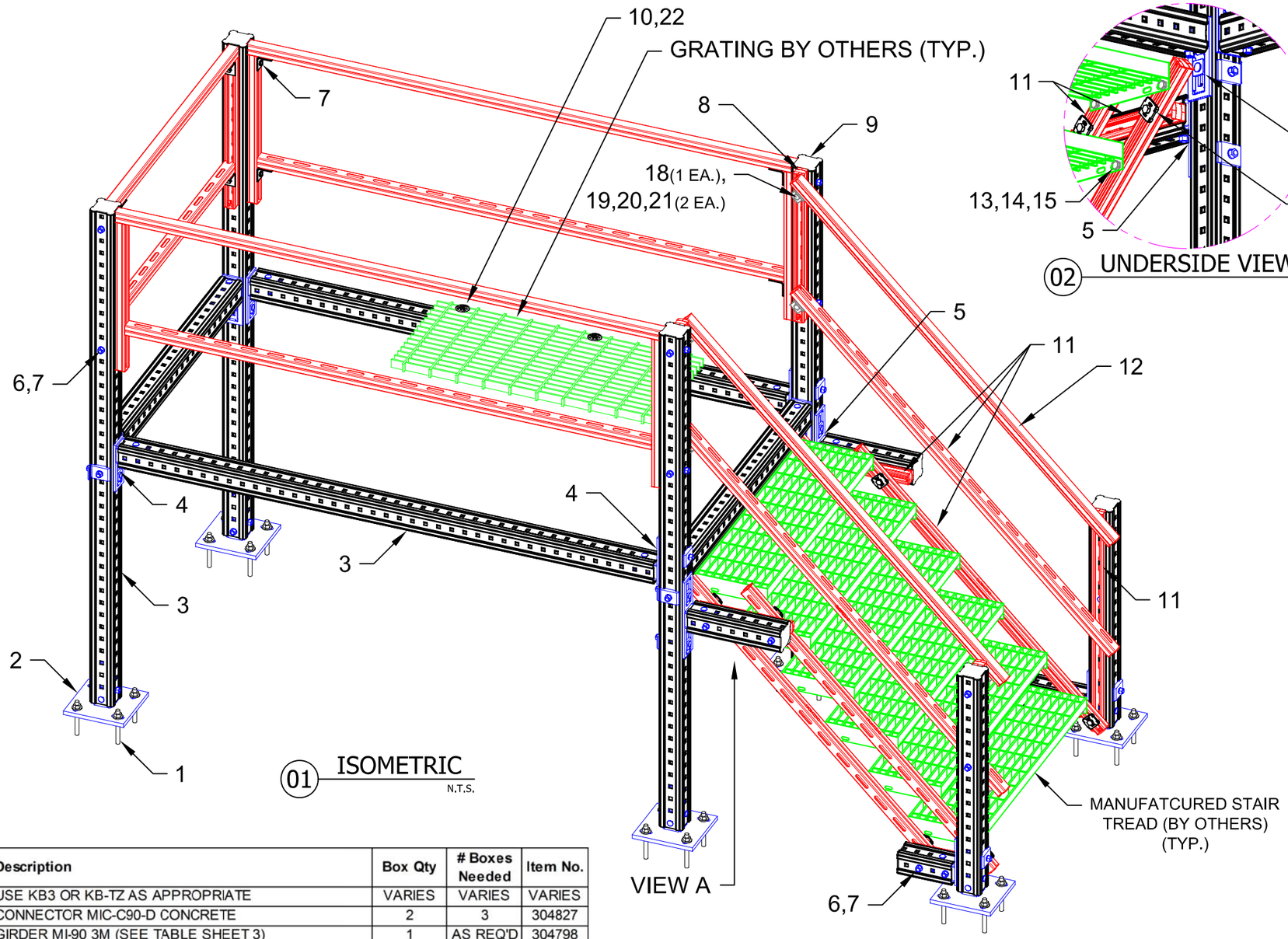

01 ISOMETRIC
N.T.S.

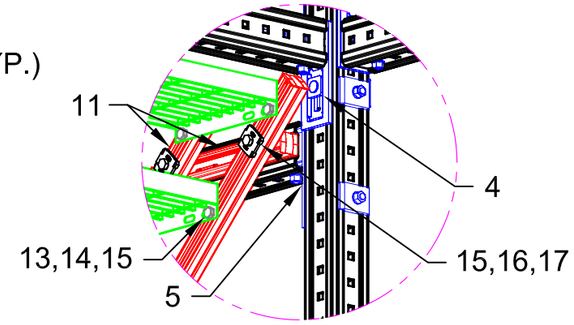

02 UNDERSIDE VIEW A
N.T.S.

No.	Unit Qty	Unit	Description	Box Qty	# Boxes Needed	Item No.
1	24	EA	USE KB3 OR KB-TZ AS APPROPRIATE	VARIES	VARIES	VARIES
2	6	EA	CONNECTOR MIC-C90-D CONCRETE	2	3	304827
3	AS REQ'D	EA	GIRDER MI-90 3M (SEE TABLE SHEET 3)	1	AS REQ'D	304798
4	10	EA	CONNECTOR MIC-90-U	4	3	304803
5	2	EA	CONNECTOR MIC-90-L	2	1	304805
6	30	EA	ONEHAND SCREW MIA-OH90	10	3	304889
7	30	EA	MI HEX NUT M12-F-SL-WS 3/4"	100	1	382897
8	76	EA	CHANNEL END CAP MEK RED	50	2	244886
9	10	EA	GIRDER END CAP MIA-EC90	25	1	432077
10	AS REQ'D	EA	GRATING DISC X-FCM-M 1 1/4"	100	AS REQ'D	378686
11	AS REQ'D	EA	STRUT HS-158-12/HDG 10' (SEE TABLE SHEET 3)	1	AS REQ'D	407570
12	AS REQ'D	EA	STRUT HS-158-12/HDG SOLID 10' (SEE TABLE SHEET 3)	VARIES	AS REQ'D	SPECIAL
13	24	EA	HEX HEAD BOLT 3/8" x 1-1/4" (HDG)	VARIES	VARIES	SPECIAL
14	24	EA	WASHER 3/8" (HDG)	VARIES	VARIES	SPECIAL
15	32	EA	WING NUT MQM-F3/8"-F	25	2	304136
16	8	EA	HEX HEAD BOLT 3/8" x 2-1/2" (HDG)	VARIES	VARIES	SPECIAL
17	8	EA	BASE PLATE MQZ-F3/8"-F	20	1	304200
18	8	EA	JS 20 0000EG 1/4" CLIP ANGLE (HDG) SPECIAL	VARIES	AS REQ'D	SPECIAL
19	16	EA	HEX HEAD BOLT 1/2" x 1-1/4" (HDG)	VARIES	VARIES	SPECIAL
20	16	EA	WASHER 1/2" (HDG)	VARIES	VARIES	SPECIAL
21	16	EA	WING NUT MQM-F1/2"-F	25	1	304137
22	AS REQ'D	EA	X-BT M8-15-6 SN12-R	100	AS REQ'D	377074

NOTE(S):

1. PRELIMINARY, NOT FOR CONSTRUCTION
2. DESIGN ASSUMPTIONS:
   a. NO LOADS CONSIDERED - CONCEPT ONLY
   b. LATERAL LOADS NOT CONSIDERED
   c. BUILDING CODE:NOT SPECIFIED
   d. CORROSION RESISTANCE REQD.: NOT SPECIFIED
2. REFER TO COMPONENT MANUFACTURER'S IFUs FOR REQUIRED INSTALLATION INFO.
3. E.O.R. MUST BE NOTIFIED OF ANY DEVIATIONS FROM EXISTING/ NEW SUBSTRATE CONDITIONS SHOWN HEREIN TO VALIDATE ACCEPTANCE OF THIS HILTI DESIGN PRIOR TO INSTALLATION.

All loading and design criteria supplied by customer is assumed accurate. Only the stated Design Assumptions were considered, and must be verified by the responsible Engineer of Record (EOR). The basis of Hilti component and connection design is the published data in the current Hilti Technical Guide, including material and cross-section properties, allowable load values, factors of safety, methods of calculation, and limiting factors. The EOR must verify suitability for any specific application, and the capacity of the supportive structure to receive the shown configuration and associated reaction loads. Modification to components and/or design may alter performance and must be evaluated by the EOR.

PROJECT NAME:

PLATFORM

SERVICE REQUEST DESCRIPTION:

STAND ALONE

DESIGNED BY:	REVIEWED BY:
MES	AJV
DRAWN BY:	ISSUE DATE:
GAB	25 FEB 15

REVISIONS:

NO:	DESCRIPTION:	DATE:
A	ORIGINAL ISSUE	25 FEB 15

SERVICE REQUEST NUMBER:

PL - SA02 - C

DRAWING NUMBER:	SHEET:
01	1/3

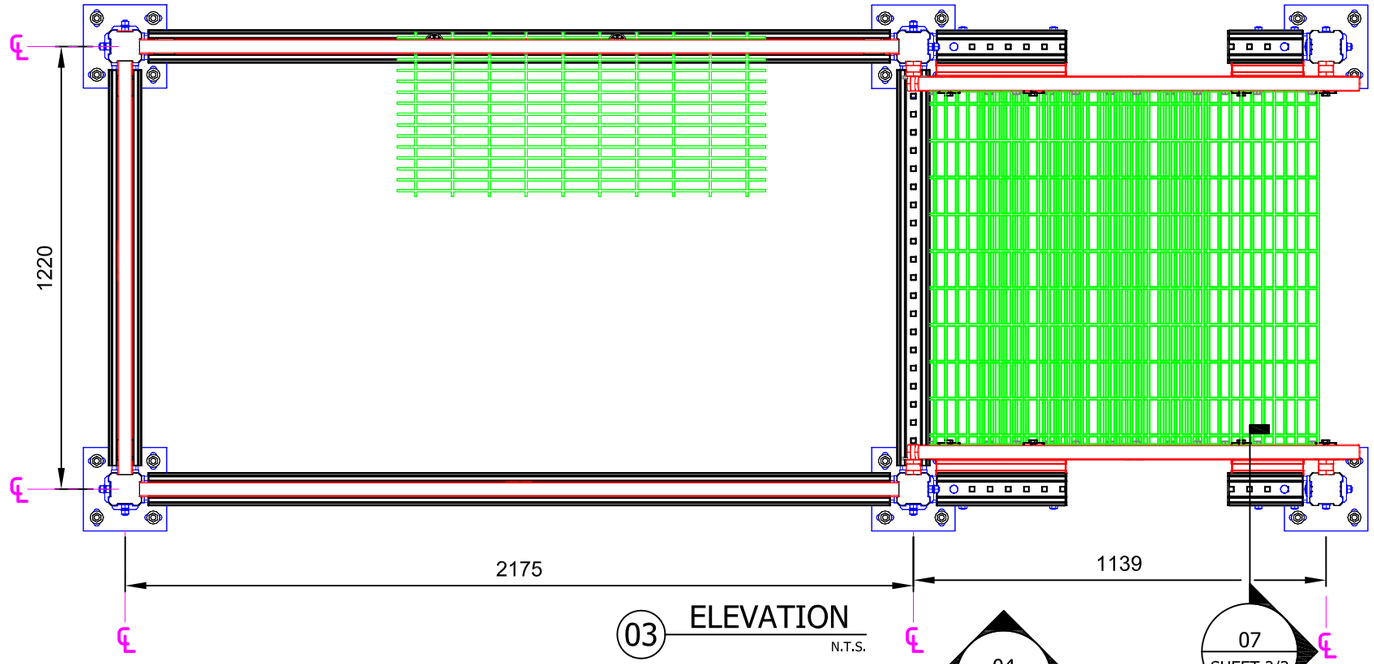

03 ELEVATION
N.T.S.

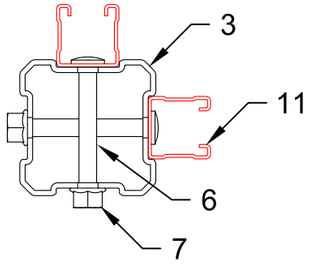

06 SECTION
N.T.S.

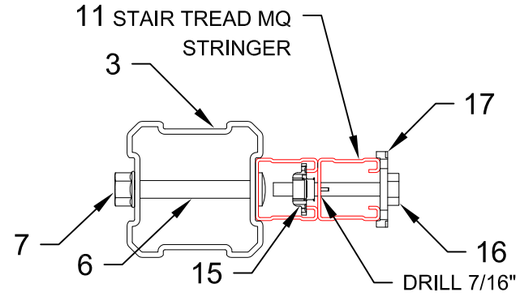

07 SECTION
N.T.S.

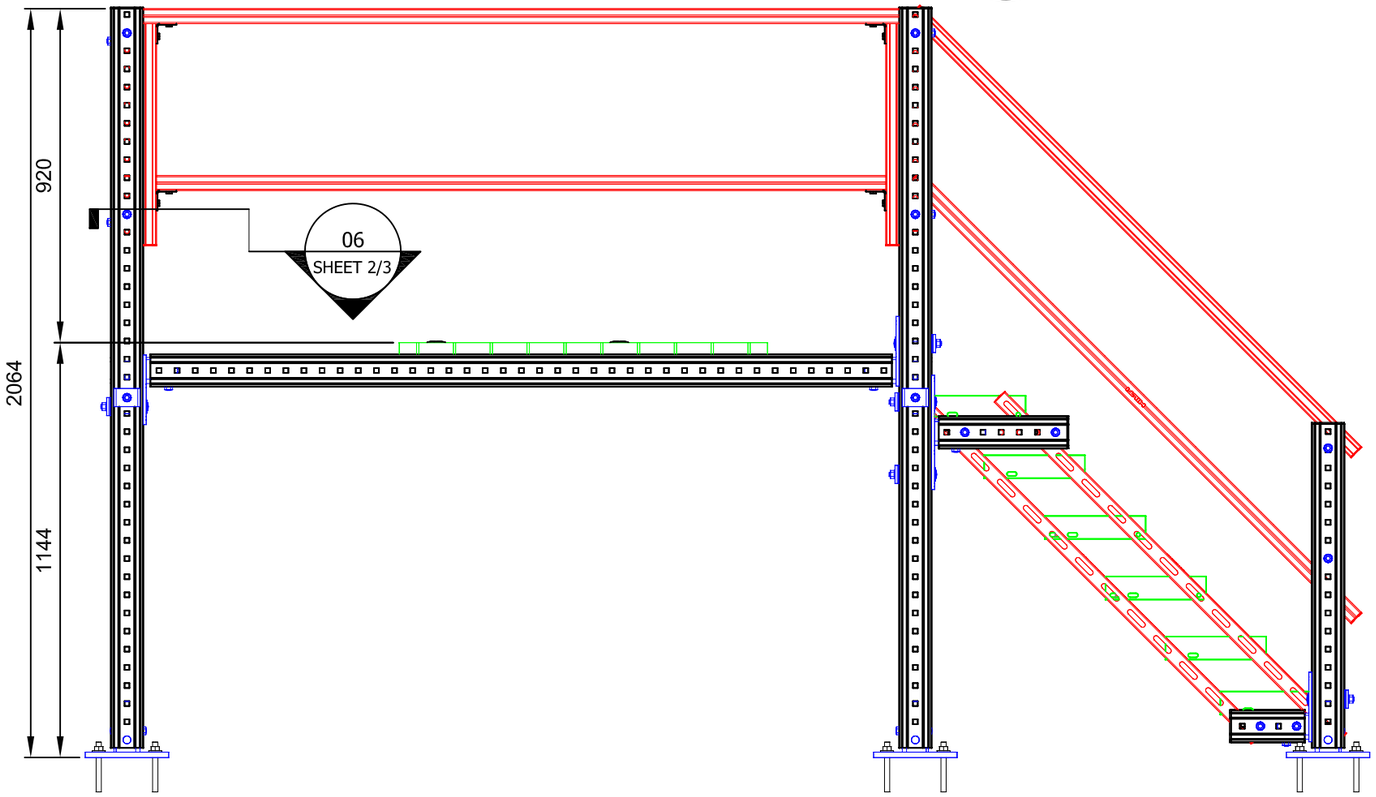

04 ELEVATION
N.T.S.

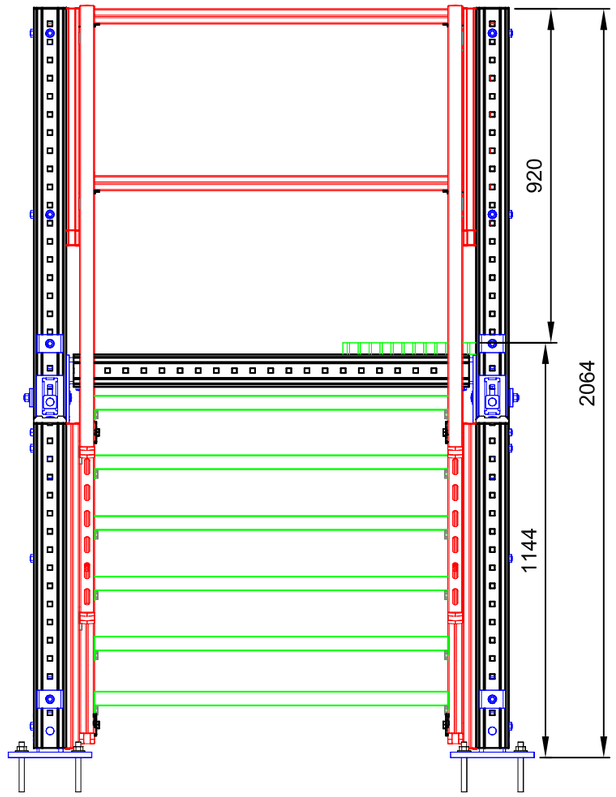

05 ELEVATION
N.T.S.

NOTE(S):
1. REFER TO SHEET 1 FOR APPLICABLE NOTE(S).

All loading and design criteria supplied by customer is assumed accurate. Only the stated Design Assumptions were considered, and must be verified by the responsible Engineer of Record (EOR). The basis of Hilti component and connection design is the published data in the current Hilti Technical Guide, including material and cross-section properties, allowable load values, factors of safety, methods of calculation, and limiting factors. The EOR must verify suitability for any specific application, and the capacity of the supportive structure to receive the shown configuration and associated reaction loads. Modification to components and/or design may alter performance and must be evaluated by the EOR.

PROJECT NAME:
PLATFORM

SERVICE REQUEST DESCRIPTION:
STAND ALONE

DESIGNED BY:	REVIEWED BY:
MES	AJV
DRAWN BY:	ISSUE DATE:
GAB	25 FEB 15

REVISIONS:

NO:	DESCRIPTION:	DATE:
A	ORIGINAL ISSUE	25 FEB 15

SERVICE REQUEST NUMBER:
PL - SA02 - C

DRAWING NUMBER:	SHEET:
01	2/3

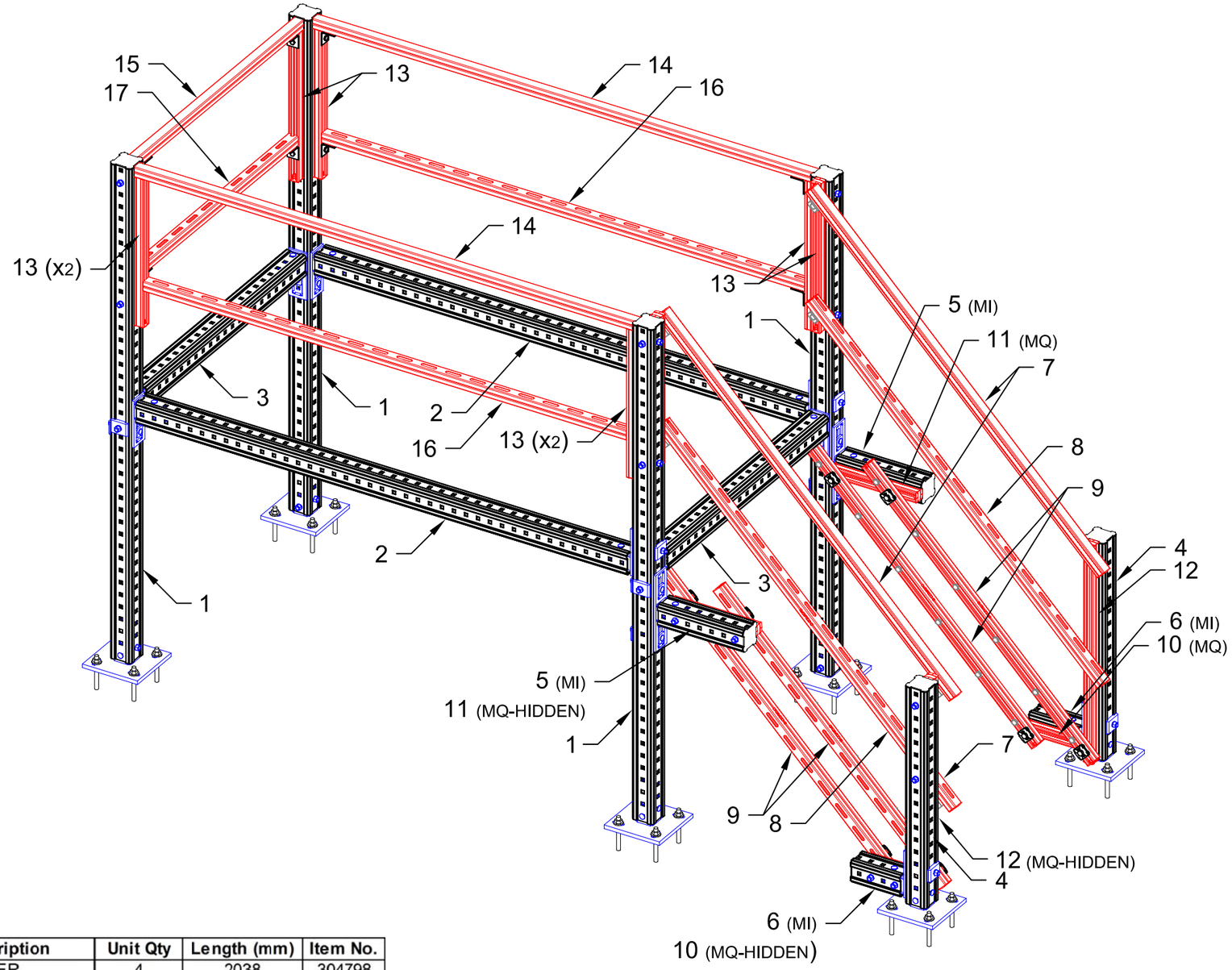

08 ISOMETRIC - CUT LENGTHS

N.T.S.

GRATING & STAIRS NOT SHOWN FOR CLARITY

No.	Description	Unit Qty	Length (mm)	Item No.
1	MI GIRDER	4	2038	304798
2	MI GIRDER	2	2046	304798
3	MI GIRDER	2	1091	304798
4	MI GIRDER	2	894	304798
5	MI GIRDER	2	355	304798
6	MI GIRDER	2	204	304798
7	SOLID STRUT HDG	2	1718	SPECIAL
8	SOLID STRUT HDG	2	1718	SPECIAL
9	STRUT HDG	4	1330	407570
10	STRUT HDG	2	204	407570
11	STRUT HDG	2	355	407570
12	STRUT HDG	2	894	407570
13	STRUT HDG	8	610	407570
14	SOLID STRUT HDG	2	2095	SPECIAL
15	SOLID STRUT HDG	1	1140	SPECIAL
16	STRUT HDG	2	2012	407570
17	STRUT HDG	1	1058	407570

NOTE(S):

1. REFER TO SHEET 1 FOR APPLICABLE NOTE(S).

All loading and design criteria supplied by customer is assumed accurate. Only the stated Design Assumptions were considered, and must be verified by the responsible Engineer of Record (EOR). The basis of Hilti component and connection design is the published data in the current Hilti Technical Guide, including material and cross-section properties, allowable load values, factors of safety, methods of calculation, and limiting factors. The EOR must verify suitability for any specific application, and the capacity of the supportive structure to receive the shown configuration and associated reaction loads. Modification to components and/or design may alter performance and must be evaluated by the EOR.

PROJECT NAME:

PLATFORM

SERVICE REQUEST DESCRIPTION:

STAND ALONE

DESIGNED BY:	REVIEWED BY:
MES	AJV
DRAWN BY:	ISSUE DATE:
GAB	25 FEB 15

REVISIONS:

NO:	DESCRIPTION:	DATE:
A	ORIGINAL ISSUE	25 FEB 15

SERVICE REQUEST NUMBER:

PL - SA02 - C

DRAWING NUMBER:	SHEET:
01	3/3

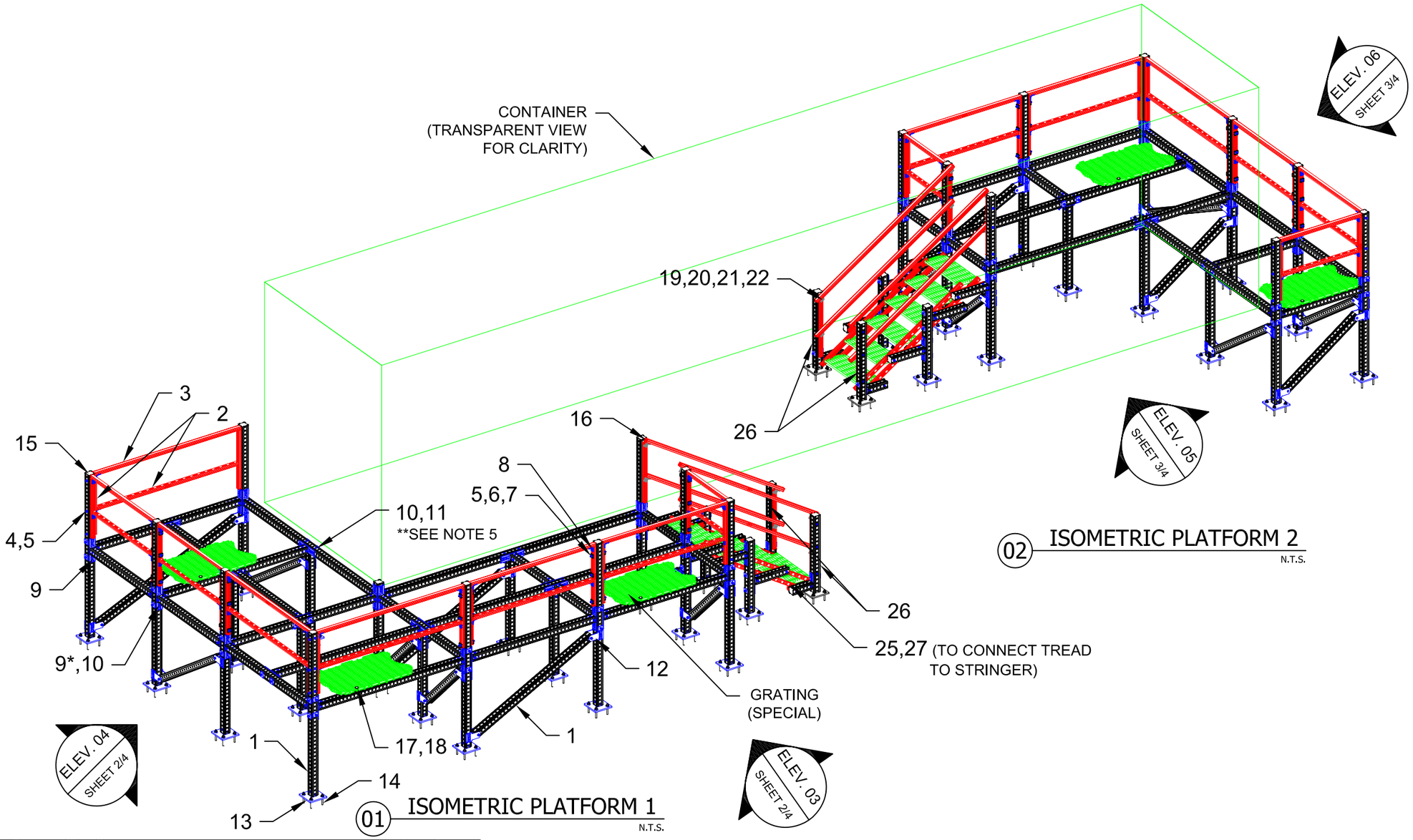

02 ISOMETRIC PLATFORM 2
N.T.S.

01 ISOMETRIC PLATFORM 1
N.T.S.

No.	Unit Qty	Unit	Description	Box Qty	# Boxes Needed	Item No.
1	AS REQ'D	EA	GIRDER MI-90 6M	1	AS REQ'D	304799
2	AS REQ'D	EA	STRUT HS-158-12/HDG 10'	1	AS REQ'D	407570
3	AS REQ'D	EA	STRUT HS-158-12/HDG SOLID 10'	1	AS REQ'D	SPECIAL
4	58	EA	ONEHAND SCREW MIA-OH90	10	6	304889
5	106	EA	MI HEX NUT M12-F-SL-WS 3/4"	100	2	382897
6	AS REQ'D	EA	THREADED STUD Grade 8.8 M12X1000-F (3.28 ft)	15	AS REQ'D	304774
7	54	EA	BASE PLATE MQZ-F1/2"-F	20	3	304201
8	58	EA	2-HOLE ANGLE MQW-Q2	20	3	369655
9	88	EA	CONNECTOR MIC-90-L	2	44	304805
10	104	EA	TOOTHED PLATE MIA-TP	20	6	305707
11	18	EA	ONEHAND SCREW MIA-OH120	10	2	304890
12	34	PR	CONNECTOR MIC-U-MA	2	17	304806
13	33	EA	CONNECTOR MIC-C90-D CONCRETE	2	17	304827
14	132	EA	USE 5/8" Ø KB-TZ AS APPROPRIATE	VARIES	VARIES	VARIES
15	40	EA	GIRDER END CAP MIA-EC90	25	2	432077
16	154	EA	CHANNEL END CAP MEK RED	50	4	244886
17	AS REQ'D	EA	X-BT M8-15	100	AS REQ'D	377074
18	AS REQ'D	EA	X-FCM GRATING CLIP	VARIES	AS REQ'D	VARIES
19	8	EA	JS 20 0000EG 1/4" CLIP ANGLE SPECIAL	VARIES	VARIES	SPECIAL
20	16	EA	HEX HEAD BOLT 1/2" x 1-1/2" &" HDG"	VARIES	VARIES	SPECIAL
21	16	EA	WASHER 1/2" HDG	VARIES	VARIES	SPECIAL
22	16	EA	WING NUT MQM-F1/2"-F	25	1	304137
23	32	EA	BASE PLATE MQZ-F3/8"-F	20	2	304200
24	32	EA	HEX HEAD BOLT 3/8" x 2 1/2" - HDG	VARIES	VARIES	SPECIAL
25	80	EA	WING NUT MQM-F3/8"	50	2	377882
26	4	EA	MIC-C-90D-2000	1	4	267793
27	48	EA	HEX HEAD BOLT 3/8 x 1-1/4" HDG	VARIES	VARIES	SPECIAL

NOTE(S):

1. PRELIMINARY, NOT FOR CONSTRUCTION
2. DESIGN ASSUMPTIONS:
   a. NO LOADS CONSIDERED - CONCEPT ONLY
   b. LATERAL LOADS NOT CONSIDERED
   c. BUILDING CODE:NOT SPECIFIED
   d. CORROSION RESISTANCE REQD.: NOT SPECIFIED
2. REFER TO COMPONENT MANUFACTURER'S IFUs FOR REQUIRED INSTALLATION INFO.
3. E.O.R. MUST BE NOTIFIED OF ANY DEVIATIONS FROM EXISTING/ NEW SUBSTRATE CONDITIONS SHOWN HEREIN TO VALIDATE ACCEPTANCE OF THIS HILTI DESIGN PRIOR TO INSTALLATION.

All loading and design criteria supplied by customer is assumed accurate. Only the stated Design Assumptions were considered, and must be verified by the responsible Engineer of Record (EOR). The basis of Hilti component and connection design is the published data in the current Hilti Technical Guide, including material and cross-section properties, allowable load values, factors of safety, methods of calculation, and limiting factors. The EOR must verify suitability for any specific application, and the capacity of the supportive structure to receive the shown configuration and associated reaction loads. Modification to components and/or design may alter performance and must be evaluated by the EOR.

PROJECT NAME:

PLATFORM

SERVICE REQUEST DESCRIPTION:

STAND ALONE

DESIGNED BY:	REVIEWED BY:
CAA	AJV
DRAWN BY:	ISSUE DATE:
HAM	25 FEB 15

REVISIONS:

NO:	DESCRIPTION:	DATE:
A	ORIGINAL ISSUE	25 FEB 15

SERVICE REQUEST NUMBER:

PL - SA03 - C

DRAWING NUMBER:	SHEET:
01	1/4

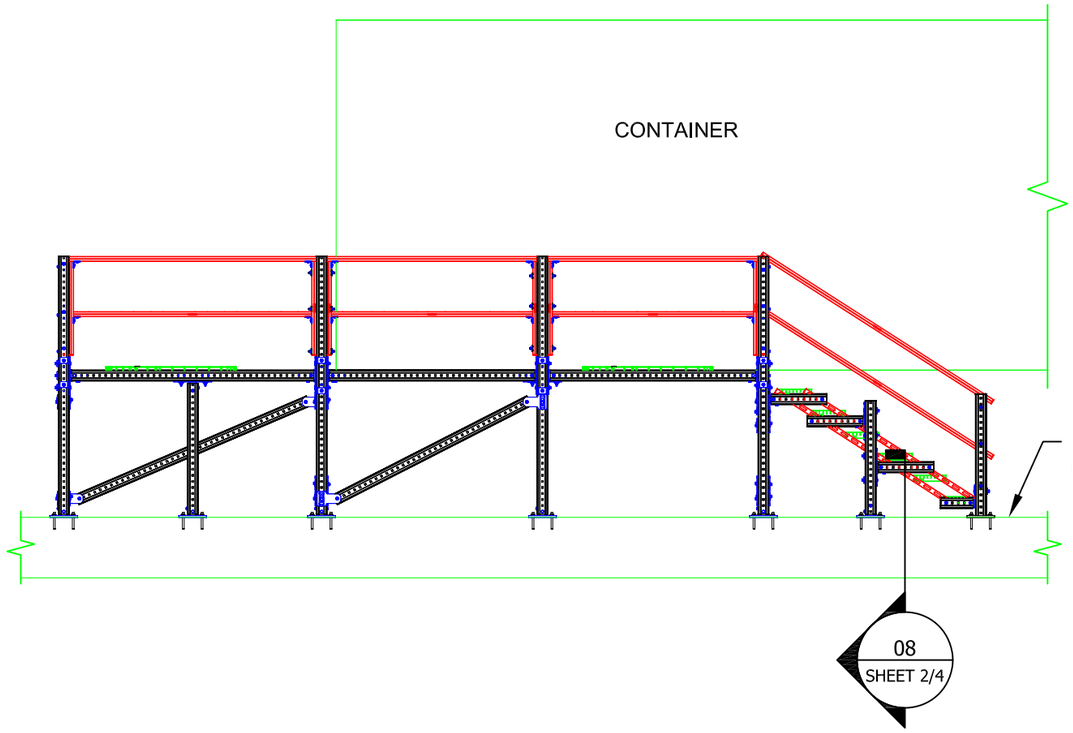

03 ELEVATION
N.T.S.

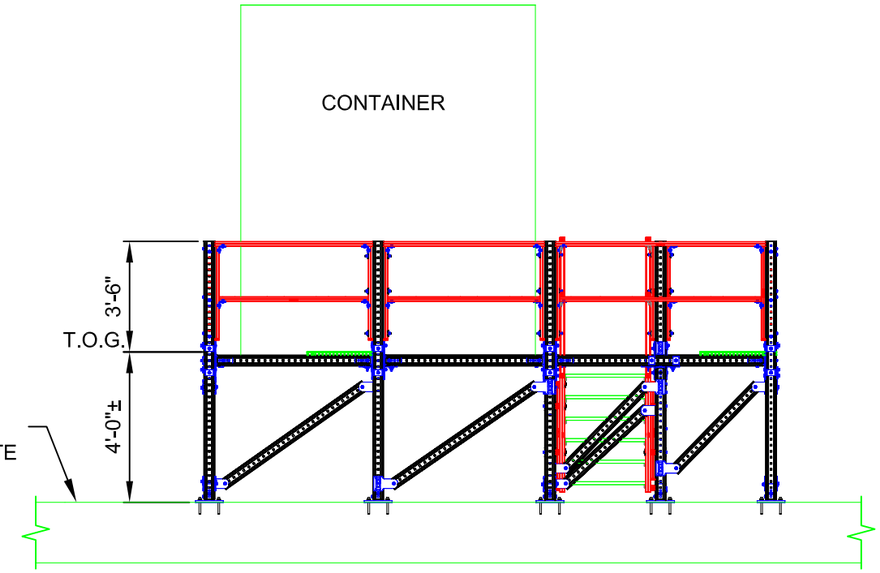

04 ELEVATION
N.T.S.

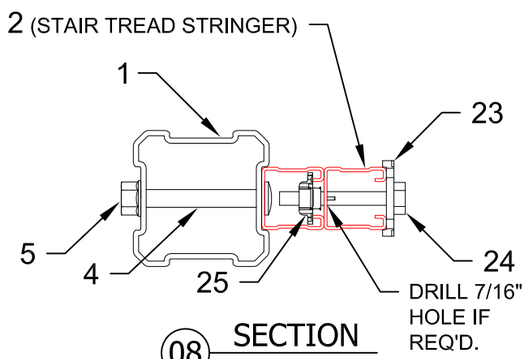

08 SECTION
N.T.S.

NOTE(S):
1. REFER TO SHEET 1 FOR APPLICABLE NOTE(S).

All loading and design criteria supplied by customer is assumed accurate. Only the stated Design Assumptions were considered, and must be verified by the responsible Engineer of Record (EOR). The basis of Hilti component and connection design is the published data in the current Hilti Technical Guide, including material and cross-section properties, allowable load values, factors of safety, methods of calculation, and limiting factors. The EOR must verify suitability for any specific application, and the capacity of the supportive structure to receive the shown configuration and associated reaction loads. Modification to components and/or design may alter performance and must be evaluated by the EOR.

PROJECT NAME:
PLATFORM

SERVICE REQUEST DESCRIPTION:
STAND ALONE

DESIGNED BY:	REVIEWED BY:
CAA	AJV
DRAWN BY:	ISSUE DATE:
HAM	25 FEB 15

REVISIONS:

NO:	DESCRIPTION:	DATE:
A	ORIGINAL ISSUE	25 FEB 15

SERVICE REQUEST NUMBER:
PL - SA03 - C

DRAWING NUMBER:	SHEET:
01	2/4

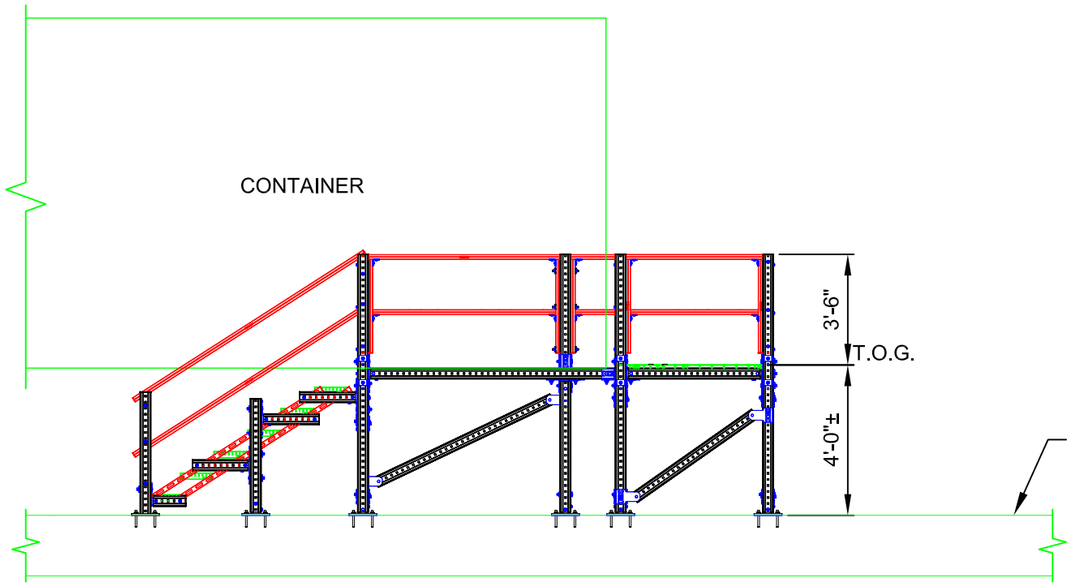

05 ELEVATION
N.T.S.

T.O.
CONCRETE

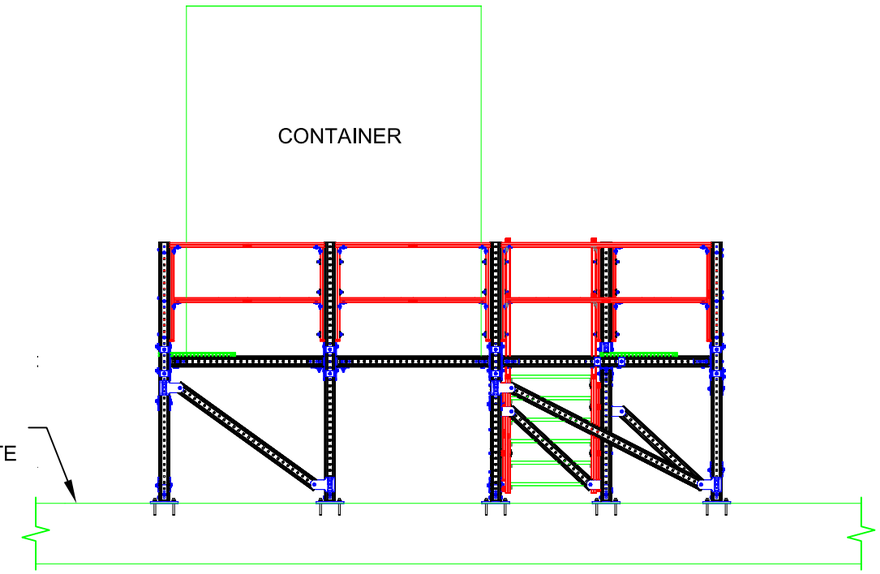

06 ELEVATION
N.T.S.

NOTE(S):
1. REFER TO SHEET 1 FOR APPLICABLE NOTE(S).

All loading and design criteria supplied by customer is assumed accurate. Only the stated Design Assumptions were considered, and must be verified by the responsible Engineer of Record (EOR). The basis of Hilti component and connection design is the published data in the current Hilti Technical Guide, including material and cross-section properties, allowable load values, factors of safety, methods of calculation, and limiting factors. The EOR must verify suitability for any specific application, and the capacity of the supportive structure to receive the shown configuration and associated reaction loads. Modification to components and/or design may alter performance and must be evaluated by the EOR.

PROJECT NAME:
PLATFORM

SERVICE REQUEST DESCRIPTION:
STAND ALONE

DESIGNED BY:	REVIEWED BY:
CAA	AJV
DRAWN BY:	ISSUE DATE:
HAM	25 FEB 15

REVISIONS:

NO:	DESCRIPTION:	DATE:
A	ORIGINAL ISSUE	25 FEB 15

SERVICE REQUEST NUMBER:
PL - SA03 - C

DRAWING NUMBER:	SHEET:
01	3/4

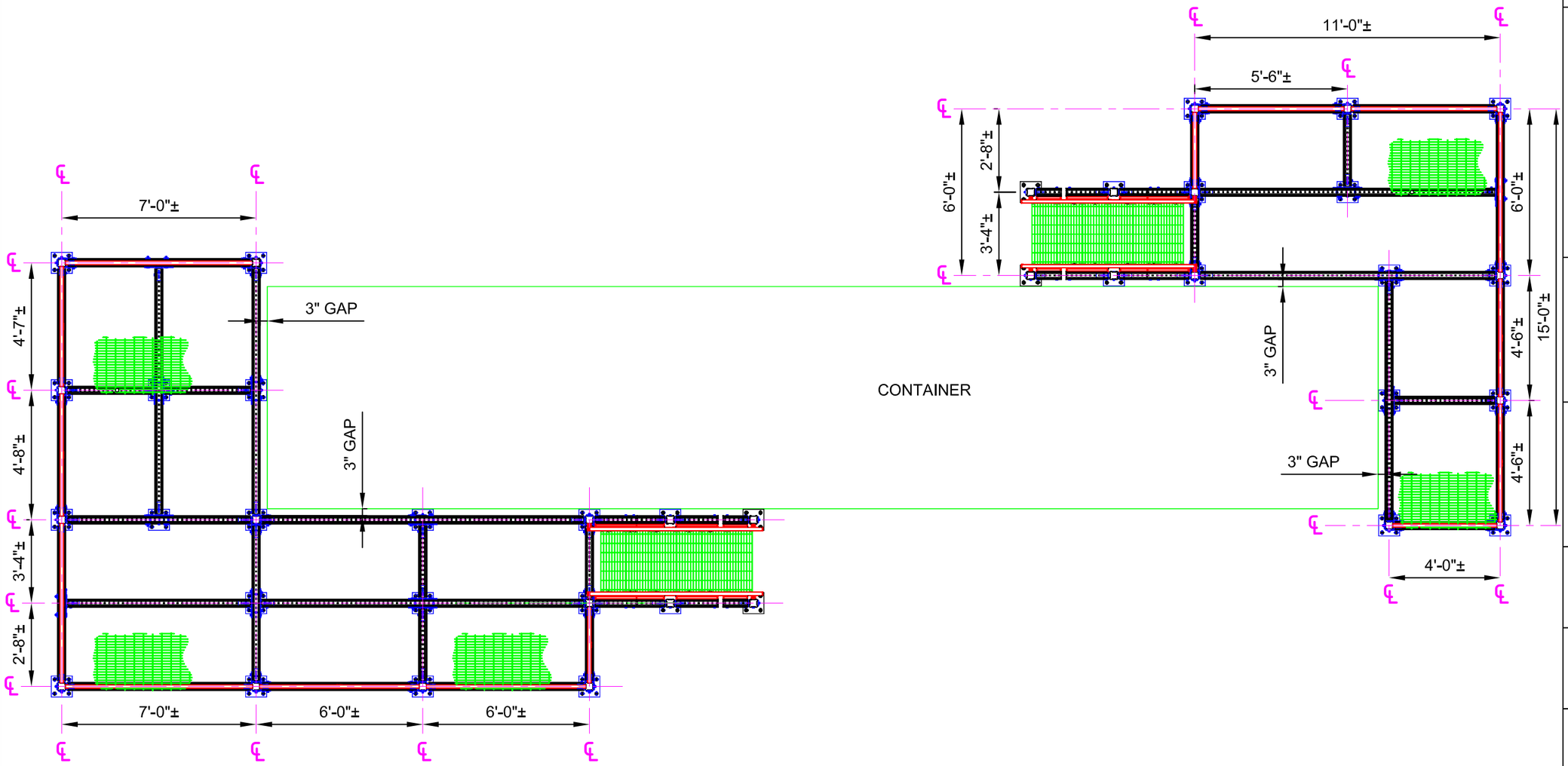

07 PLAN VIEW
N.T.S.

NOTE(S):
1. REFER TO SHEET 1 FOR APPLICABLE NOTE(S).

All loading and design criteria supplied by customer is assumed accurate. Only the stated Design Assumptions were considered, and must be verified by the responsible Engineer of Record (EOR). The basis of Hilti component and connection design is the published data in the current Hilti Technical Guide, including material and cross-section properties, allowable load values, factors of safety, methods of calculation, and limiting factors. The EOR must verify suitability for any specific application, and the capacity of the supportive structure to receive the shown configuration and associated reaction loads. Modification to components and/or design may alter performance and must be evaluated by the EOR.

PROJECT NAME:

PLATFORM

SERVICE REQUEST DESCRIPTION:

STAND ALONE

DESIGNED BY:	REVIEWED BY:
CAA	AJV
DRAWN BY:	ISSUE DATE:
HAM	25 FEB 15

REVISIONS:

NO:	DESCRIPTION:	DATE:
A	ORIGINAL ISSUE	25 FEB 15

SERVICE REQUEST NUMBER:

PL - SA03 - C

DRAWING NUMBER:	SHEET:
01	4/4