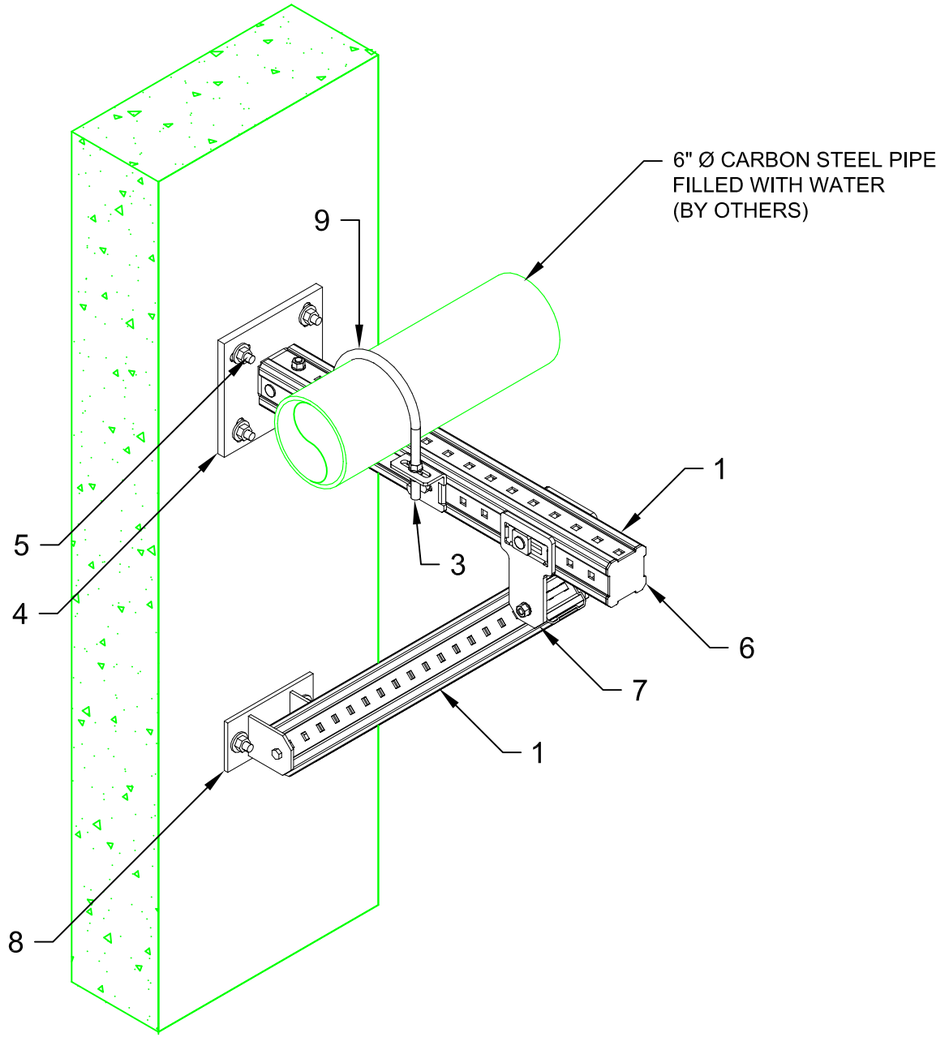

ELEV. 02
SHEET 1/1

01 ISOMETRIC
N.T.S.

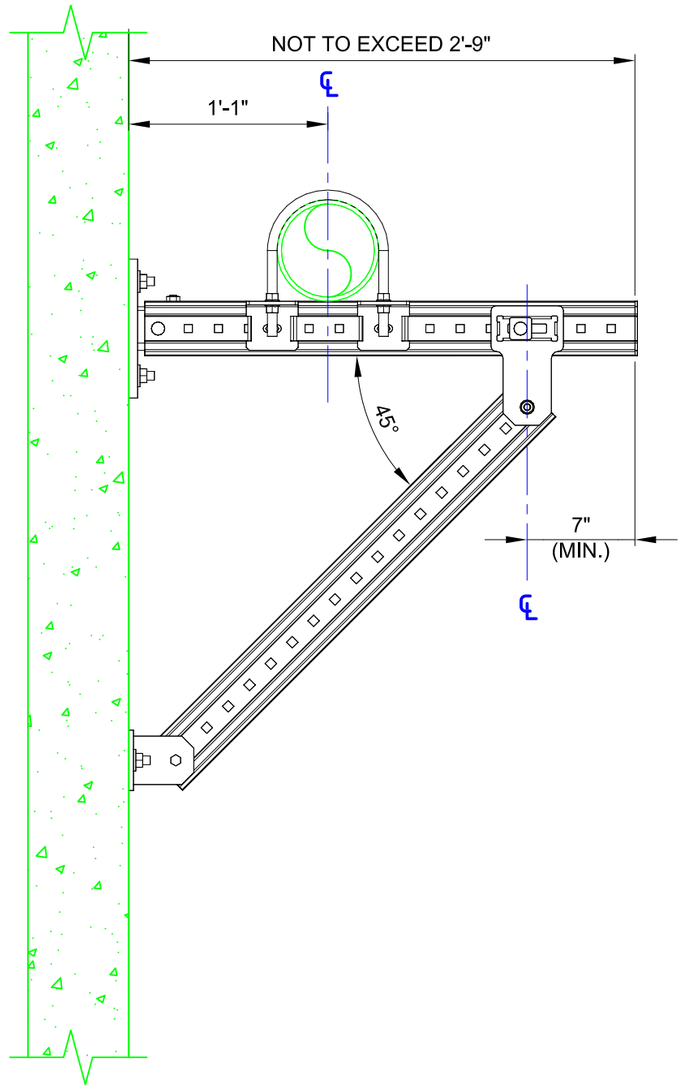

02 ELEVATION
N.T.S.

No.	Unit Qty	Unit	Description	Box Qty	# Boxes Needed	Item No.
1	AS REQ'D	EA	GIRDER MI-90 3M	1	AS REQ'D	304798
2	NOT USED	EA	CONNECTOR MIC-90-U	4	0	304803
3	1	PR	CONNECTOR U-BOLT MIC-UB90-M16	6	1	304834
4	1	EA	CONNECTOR MIC-C90-D CONCRETE	2	1	304827
5	6	EA	USE KB-TZ OR HDA AS APPROPRIATE	VARIES	VARIES	VARIES
6	1	EA	GIRDER END CAP MIA-EC90	25	1	432077
7	1	PR	CONNECTOR MIC-U-MA	2	1	304806
8	1	EA	CONNECTOR MIC-CU-MA CONCRETE	4	1	304828
9	1	EA	U-BOLT FOR 6" PIPE, 5/8" MAX DIAMETER	SPECIAL	SPECIAL	SPECIAL

NOTE(S):

1. PRELIMINARY NOT FOR CONSTRUCTION
2. DESIGN ASSUMPTIONS:
   a. DESIGN LOADS (STATIC, U.N.O.):
      DL: SCH. 40 PIPE FILLED WITH WATER.
   b. LATERAL LOADS NOT CONSIDERED
   c. BUILDING CODE: NOT SPECIFIED
   d. CORROSION RESISTANCE REQD.: NOT SPECIFIED
   e. MAX. SUPPORT SPACING = 10'-0"
3. ALL LOADS ASSUMED TO ACT AT CENTER OF PIPE(S), U.N.O.
4. REFER TO COMPONENT MANUFACTURER'S IFUs FOR REQUIRED INSTALLATION INFO.
5. E.O.R. MUST BE NOTIFIED OF ANY DEVIATIONS FROM EXISTING/ NEW SUBSTRATE CONDITIONS SHOWN HEREIN TO VALIDATE ACCEPTANCE OF THIS HILTI DESIGN PRIOR TO INSTALLATION.

All loading and design criteria supplied by customer is assumed accurate. Only the stated Design Assumptions were considered, and must be verified by the responsible Engineer of Record (EOR). The basis of Hilti component and connection design is the published data in the current Hilti Technical Guide, including material and cross-section properties, allowable load values, factors of safety, methods of calculation, and limiting factors. The EOR must verify suitability for any specific application, and the capacity of the supportive structure to receive the shown configuration and associated reaction loads. Modification to components and/or design may alter performance and must be evaluated by the EOR.

TYPICAL DETAIL TYPE:

PIPE SUPPORT

TYPICAL DETAIL DESCRIPTION:

BRACED CANTILEVER

DESIGNED BY:	REVIEWED BY:
KL	AJV
DRAWN BY:	ISSUE DATE:
HAM	09 DEC 14

REVISIONS:

NO:	DESCRIPTION:	DATE:
A	ORIGINAL ISSUE	09 DEC 14

TYPICAL DETAIL NOMENCLATURE:

P-BC01-C

DRAWING NUMBER:	SHEET:
01	1/1

\\hilti.com\us\TEAMS\Installations\Projects\TYPICALS\TYPICAL LIBRARY\PIPING (P)\CAD\P-BC01-C.dwg, 12/29/2014 2:49:45 PM

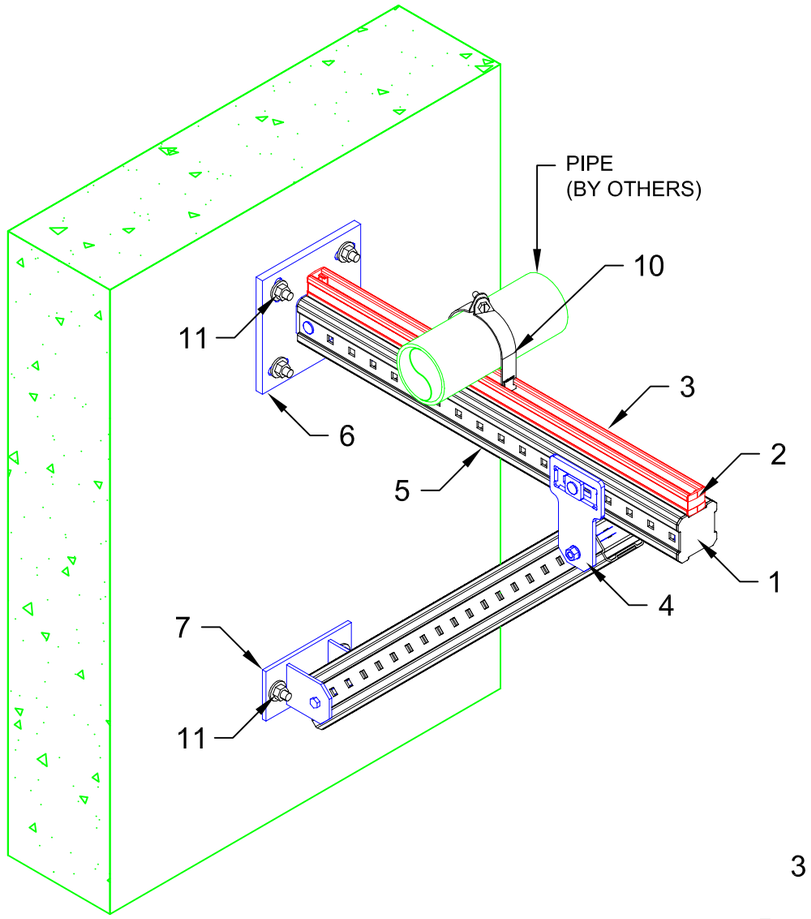

ELEV. 02
SHEET 1/1

01 ISOMETRIC
N.T.S.

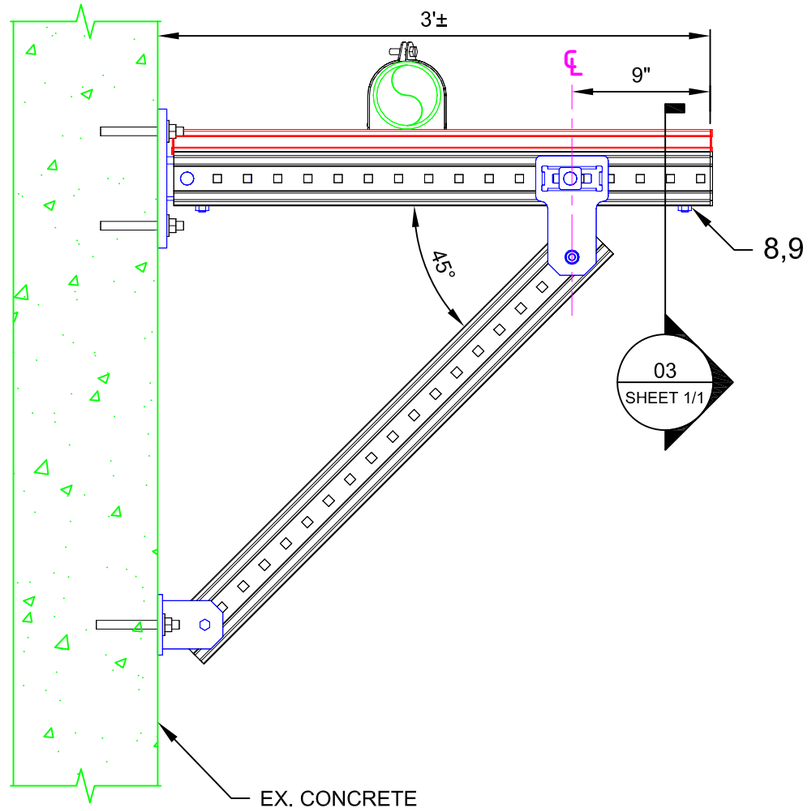

02 ELEVATION
N.T.S.

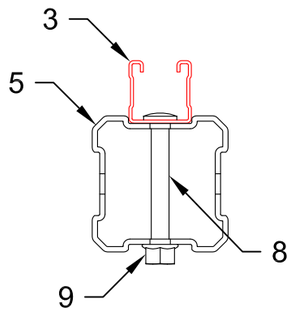

03 SECTION
N.T.S.

No.	Unit Qty	Unit	Description	Box Qty	# Boxes Needed	Item No.
1	1	EA	GIRDER END CAP MIA-EC90	25	1	432077
2	4	EA	CHANNEL END CAP MEK RED	50	1	244886
3	AS REQ'D	EA	STRUT HS-158-12/PG 10'	1	AS REQ'D	407555
4	1	PR	CONNECTOR MIC-U-MA	2	1	304806
5	AS REQ'D	EA	GIRDER MI-90 3M	1	AS REQ'D	304798
6	1	EA	CONNECTOR MIC-C90-D CONCRETE	2	1	304827
7	1	EA	CONNECTOR MIC-CU-MA CONCRETE	4	1	304828
8	1	EA	ONEHAND SCREW MIA-OH90	10	1	304889
9	1	EA	MI HEX NUT M12-F-SL-WS 3/4"	100	1	382897
10	AS REQ'D	EA	STRUT CLAMP	VARIES	VARIES	VARIES
11	6	EA	USE KB3 OR KB-TZ AS APPROPRIATE	VARIES	VARIES	VARIES

NOTE(S):
1. PRELIMINARY NOT FOR CONSTRUCTION
2. DESIGN ASSUMPTIONS:
   a. NO LOADS CONSIDERED - CONCEPT ONLY
   b. LATERAL LOADS NOT CONSIDERED
   c. BUILDING CODE: NOT SPECIFIED
   d. CORROSION RESISTANCE REQD.: NOT SPECIFIED
3. ALL LOADS ASSUMED TO ACT AT CENTER OF PIPE(S), U.N.O.
4. REFER TO COMPONENT MANUFACTURER'S IFUs FOR REQUIRED INSTALLATION INFO.
5. E.O.R. MUST BE NOTIFIED OF ANY DEVIATIONS FROM EXISTING/ NEW SUBSTRATE CONDITIONS SHOWN HEREIN TO VALIDATE ACCEPTANCE OF THIS HILTI DESIGN PRIOR TO INSTALLATION.

All loading and design criteria supplied by customer is assumed accurate. Only the stated Design Assumptions were considered, and must be verified by the responsible Engineer of Record (EOR). The basis of Hilti component and connection design is the published data in the current Hilti Technical Guide, including material and cross-section properties, allowable load values, factors of safety, methods of calculation, and limiting factors. The EOR must verify suitability for any specific application, and the capacity of the supportive structure to receive the shown configuration and associated reaction loads. Modification to components and/or design may alter performance and must be evaluated by the EOR.

TYPICAL DETAIL TYPE:

PIPE SUPPORT

TYPICAL DETAIL DESCRIPTION:

BRACED CANTILEVER

DESIGNED BY:	REVIEWED BY:
KL	AJV
DRAWN BY:	ISSUE DATE:
HAM	09 DEC 14

REVISIONS:

NO:	DESCRIPTION:	DATE:
A	ORIGINAL ISSUE	09 DEC 14

TYPICAL DETAIL NOMENCLATURE:

P-BC04-C

DRAWING NUMBER:	SHEET:
01	1/1

\\hilti.com\us\TEAMS\Installations\Projects\TYPICALS\TYPICAL LIBRARY\PIPING (P)\CAD\P-BC04-C.dwg, 12/29/2014 2:50:58 PM

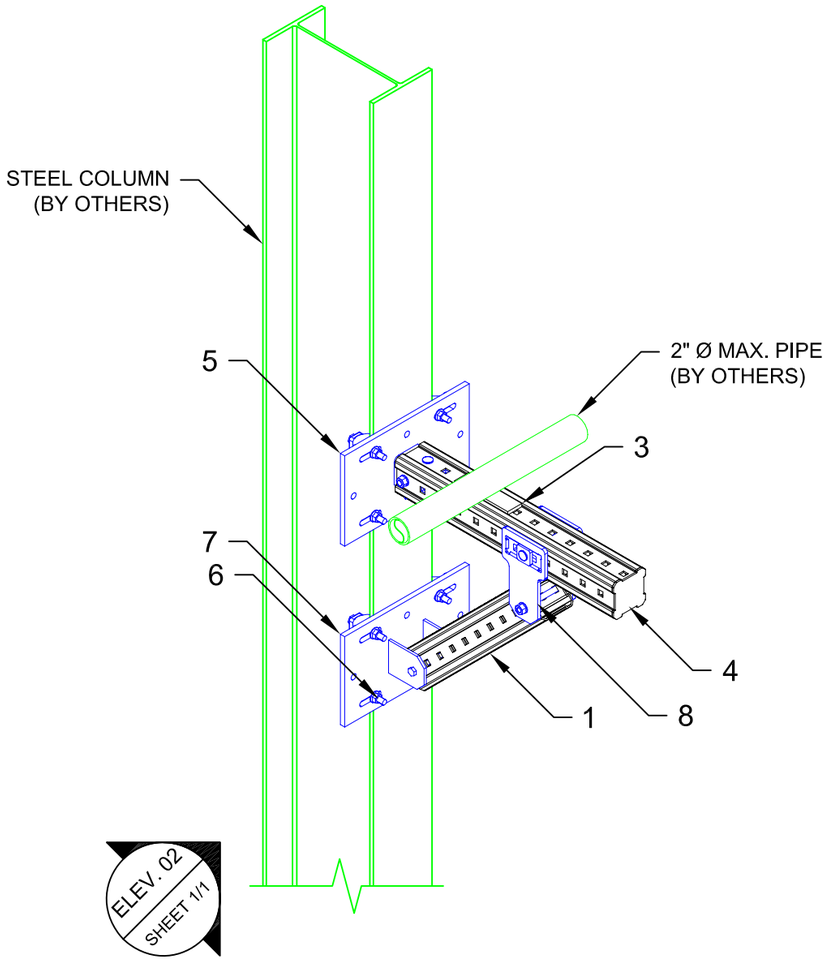

01 ISOMETRIC
N.T.S.

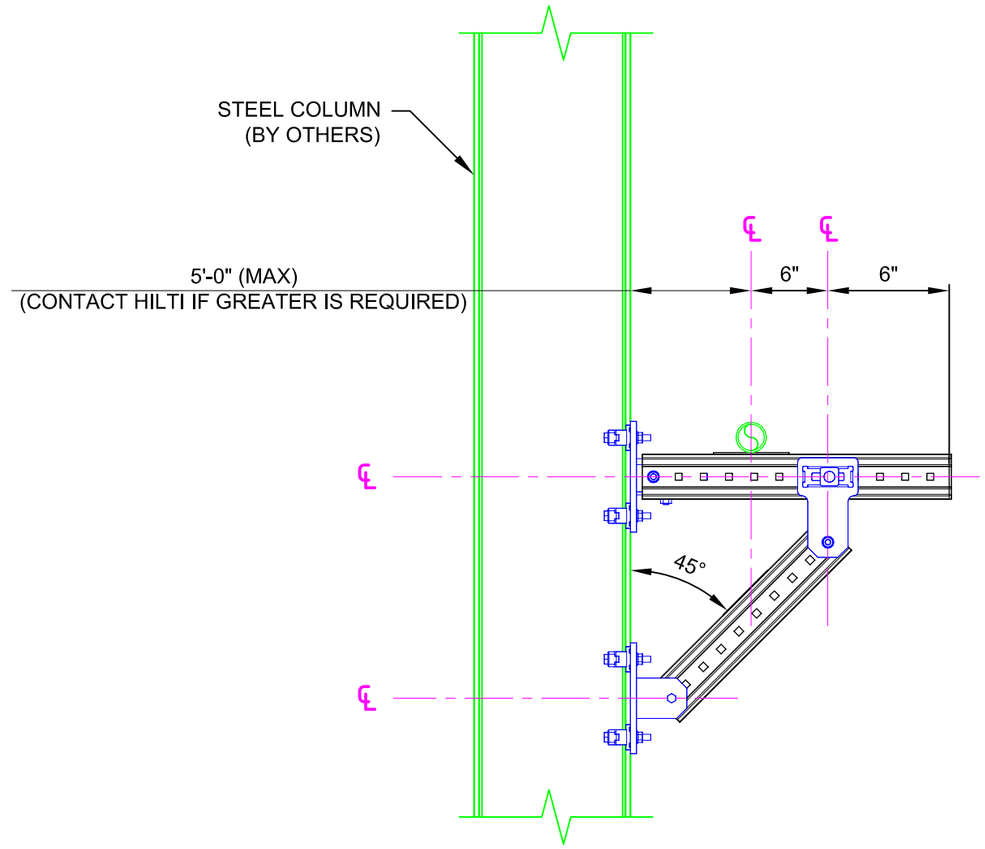

02 ELEVATION
N.T.S.

No.	Unit Qty	Unit	Description	Box Qty	# Boxes Needed	Item No.
1	AS REQ'D	EA	GIRDER MI-90 3M	1	AS REQ'D	304798
2	NOT USED	PR	CONNECTOR U-BOLT MIC-UB90	6	NOT USED	304834
3	2	EA	CONNECTOR PIPE SHOE MIC-PG	10	1	304842
4	1	EA	GIRDER END CAP MIA-EC90	25	1	432077
5	1	EA	CONNECTOR MIC-S90-X STEEL	2	1	SEE TABLE
6	8	EA	BEAM CLAMP MI-SGC-M12	16	1	233859
7	1	EA	CONNECTOR MIC-SX-MA STEEL	2	1	SEE TABLE
8	1	PR	CONNECTOR MIC-U-MA	2	1	304806

MIC-S90-X

Beam Width Table

X	'B' Width	Item No.
A	2.9 to 6.5	304812
B	6.5 to 9.2	304813
C	9.2 to 11.8	304814

MIC-SX-MA

Beam Width Table

X	'B' Width	Item No.
A	2.9 to 6.5	304815
B	6.5 to 9.2	304816
C	9.2 to 11.8	304817

NOTE(S):

1. PRELIMINARY NOT FOR CONSTRUCTION
2. DESIGN ASSUMPTIONS:
   a. DESIGN LOADS (STATIC, U.N.O.):
      DL: 100 LBS
   b. LATERAL LOADS NOT CONSIDERED
   c. BUILDING CODE: NOT SPECIFIED
   d. CORROSION RESISTANCE REQD.: NOT SPECIFIED
3. ALL LOADS ASSUMED TO ACT AT CENTER OF PIPE(S), U.N.O.
4. REFER TO COMPONENT MANUFACTURER'S IFUs FOR REQUIRED INSTALLATION INFO.
5. E.O.R. MUST BE NOTIFIED OF ANY DEVIATIONS FROM EXISTING/ NEW SUBSTRATE CONDITIONS SHOWN HEREIN TO VALIDATE ACCEPTANCE OF THIS HILTI DESIGN PRIOR TO INSTALLATION.

All loading and design criteria supplied by customer is assumed accurate. Only the stated Design Assumptions were considered, and must be verified by the responsible Engineer of Record (EOR). The basis of Hilti component and connection design is the published data in the current Hilti Technical Guide, including material and cross-section properties, allowable load values, factors of safety, methods of calculation, and limiting factors. The EOR must verify suitability for any specific application, and the capacity of the supportive structure to receive the shown configuration and associated reaction loads. Modification to components and/or design may alter performance and must be evaluated by the EOR.

TYPICAL DETAIL TYPE:

PIPE SUPPORT

TYPICAL DETAIL DESCRIPTION:

BRACED CANTILEVER

DESIGNED BY:	REVIEWED BY:
KL	AJV
DRAWN BY:	ISSUE DATE:
HAM	09 DEC 14

REVISIONS:

NO:	DESCRIPTION:	DATE:
A	ORIGINAL ISSUE	09 DEC 14

TYPICAL DETAIL NOMENCLATURE:

P-BC10-S

DRAWING NUMBER:	SHEET:
01	1/1

\\hilti.com\us\TEAMS\Installations\Projects\TYPICALS\TYPICAL LIBRARY\PIPING (P)\CAD\P-BC10-S.dwg, 12/29/2014 2:52:30 PM

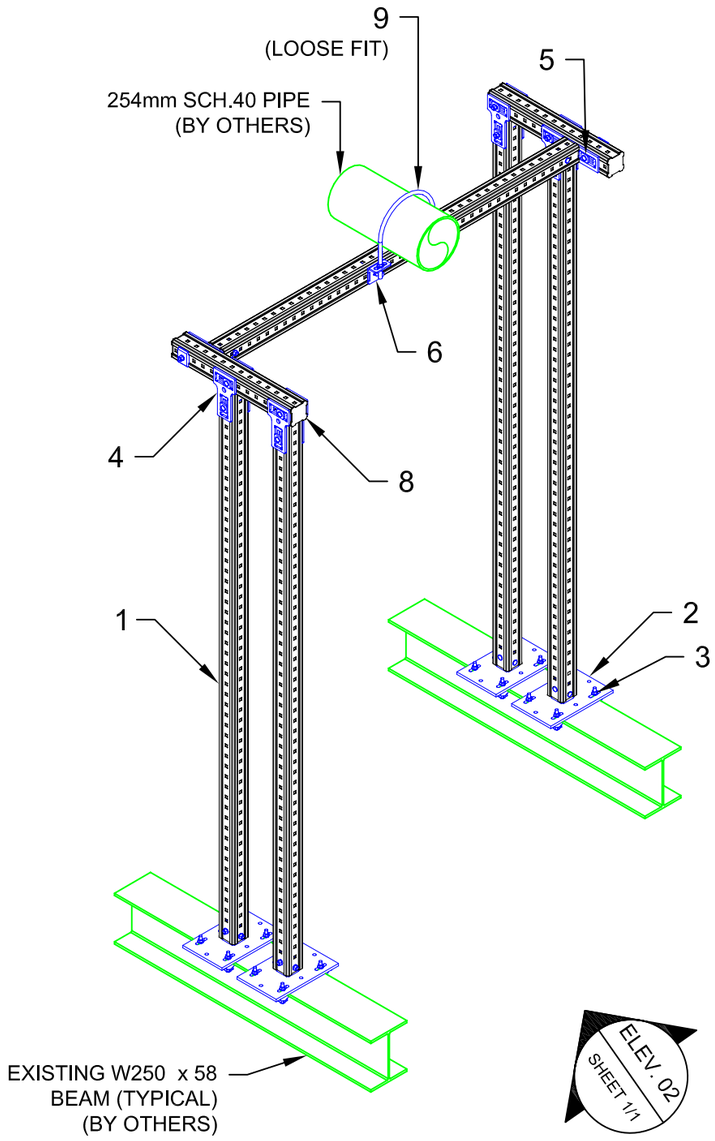

01 ISOMETRIC
N.T.S.

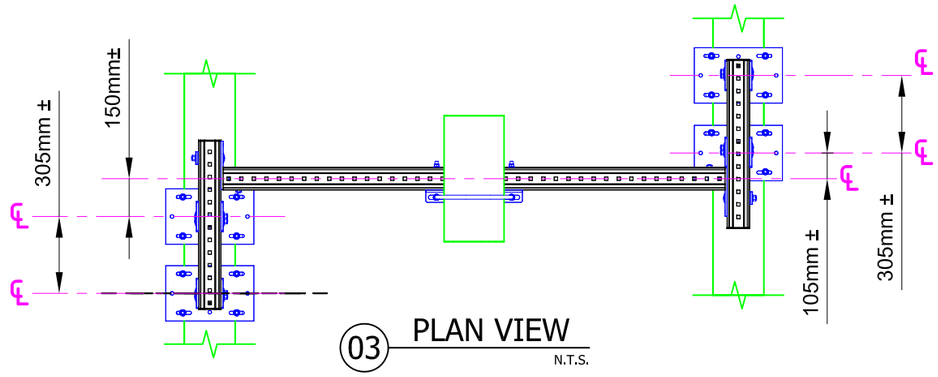

03 PLAN VIEW
N.T.S.

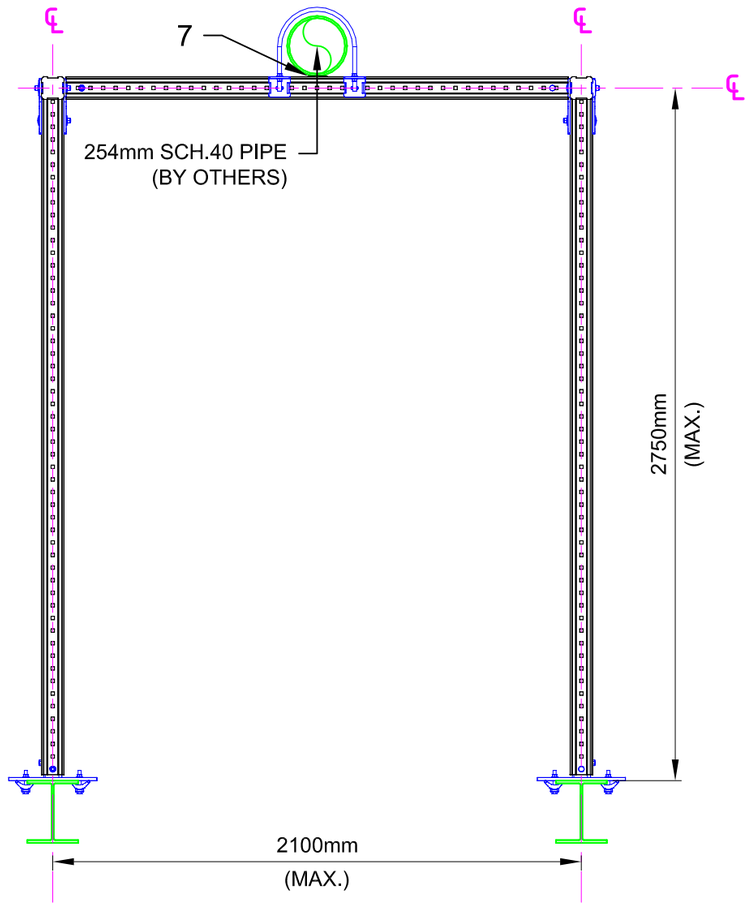

02 ELEVATION
N.T.S.

No.	Unit Qty	Unit	Description	Box Qty	# Boxes Needed	Item No.
1	AS REQ'D	EA	GIRDER MI-90 3M	1	AS REQ'D	304798
2	4	EA	CONNECTOR MIC-S90-B STEEL	2	2	304813
3	16	EA	BEAM CLAMP MI-SGC-M12	16	1	233859
4	4	PR	CONNECTOR MIC-T	2	2	304807
5	2	EA	CONNECTOR MIC-90-U	4	1	304803
6	1	PR	CONNECTOR U-BOLT MIC-UB90-M16	6	1	304834
7	1	EA	CONNECTOR PIPE SHOE MIC-PG	10	1	304842
8	4	EA	GIRDER END CAP MIA-EC90	25	1	432077
9	1	EA	U-BOLT	VARIES	VARIES	SPECIAL

NOTE(S):

1. PRELIMINARY NOT FOR CONSTRUCTION
2. DESIGN ASSUMPTIONS:
   a. DESIGN LOADS (STATIC, U.N.O.):
      DL: 4.3 kN
   b. LATERAL LOADS NOT CONSIDERED
   c. CORROSION RESISTANCE REQD.: HDG
3. ALL LOADS ASSUMED TO ACT AT CENTER OF PIPE(S), U.N.O.
4. REFER TO COMPONENT MANUFACTURER'S IFUs FOR REQUIRED INSTALLATION INFO.
5. E.O.R. MUST BE NOTIFIED OF ANY DEVIATIONS FROM EXISTING SUBSTRATE CONDITIONS SHOWN HEREIN TO VALIDATE ACCEPTANCE OF THIS HILTI DESIGN PRIOR TO INSTALLATION.
6. ADEQUCEY OF EXISTING STEEL FRAMING NOT VERIFIED BY HILTI.

All loading and design criteria supplied by customer is assumed accurate. Only the stated Design Assumptions were considered, and must be verified by the responsible Engineer of Record (EOR). The basis of Hilti component and connection design is the published data in the current Hilti Technical Guide, including material and cross-section properties, allowable load values, factors of safety, methods of calculation, and limiting factors. The EOR must verify suitability for any specific application, and the capacity of the supportive structure to receive the shown configuration and associated reaction loads. Modification to components and/or design may alter performance and must be evaluated by the EOR.

TYPICAL DETAIL TYPE:

PIPE SUPPORT

TYPICAL DETAIL DESCRIPTION:

GOALPOST - SINGLE

DESIGNED BY:	REVIEWED BY:
KL	AJV
DRAWN BY:	ISSUE DATE:
HAM	09 DEC 14

REVISIONS:

NO:	DESCRIPTION:	DATE:
A	ORIGINAL ISSUE	09 DEC 14

TYPICAL DETAIL NOMENCLATURE:

P-GP06-S

DRAWING NUMBER:	SHEET:
01	1/1

\\hilti.com\us\TEAMS\Installations\Projects\TYPICALS\TYPICAL LIBRARY\PIPING (P)\CAD\P-GP06-S.dwg, 12/29/2014 2:59:29 PM

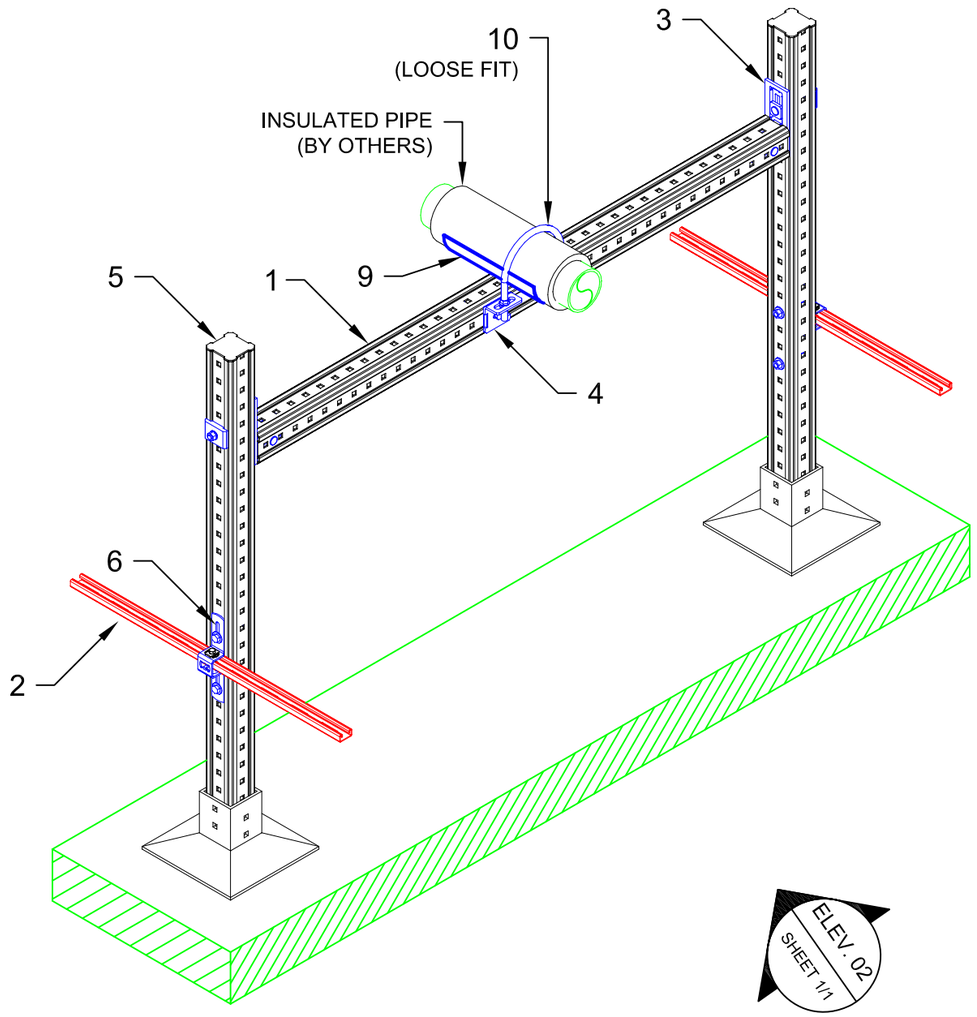

01 ISOMETRIC
N.T.S.

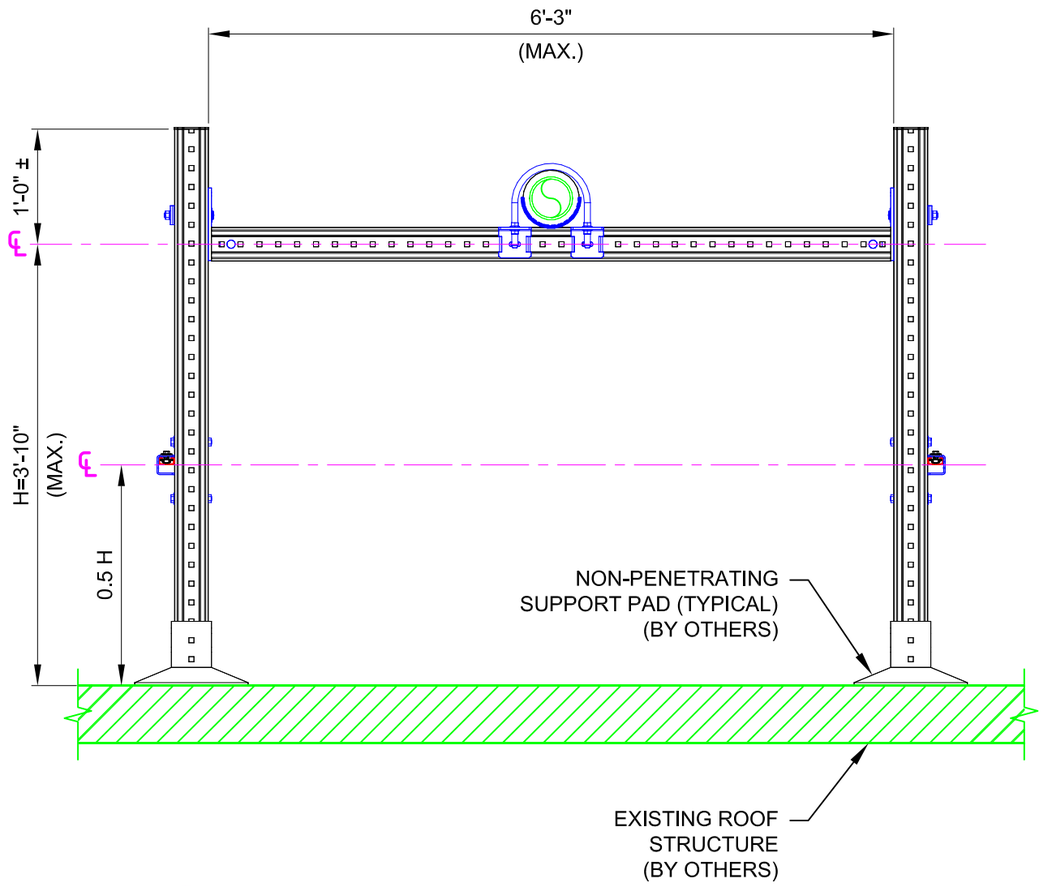

02 ELEVATION
N.T.S.

SDC INSULATION SHIELDS	
DESCRIPTION	ITEM NO.
INSULATION SHILED 2"	424197
INSULATION SHILED 2-1/2"	424198
INSULATION SHILED 3"	424199
INSULATION SHILED 4"	424200
INSULATION SHILED 5"	424202
INSULATION SHILED 6"	424203
INSULATION SHILED 8"	424204
INSULATION SHILED 10"	424205

No.	Unit Qty	Unit	Description	Box Qty	# Boxes Needed	Item No.
1	AS REQ'D	EA	GIRDER MI-90 3M	1	AS REQ'D	304798
2	AS REQ'D	EA	STRUT MS-1316-12/HDG 9'-10" (3M)	1	AS REQ'D	407569
3	2	EA	CONNECTOR MIC-90-U	4	1	304803
4	1	PR	CONNECTOR U-BOLT MIC-UB90-M16	6	1	304834
5	2	EA	GIRDER END CAP MIA-EC90	25	1	432077
6	2	EA	CONNECTOR MIC-MI/MQ-X	16	1	304881
7	AS REQ'D	EA	CHANNEL TIE MQV-12-F	10	AS REQ'D	304155
8	AS REQ'D	EA	CHANNEL CONNECTOR MQN-HDG PLUS	50	AS REQ'D	387779
9	1	EA	SDC INSULATION SHIELD (SEE TABLE)	VARIES	VARIES	VARIES
10	1	EA	U-BOLT	VARIES	VARIES	SPECIAL

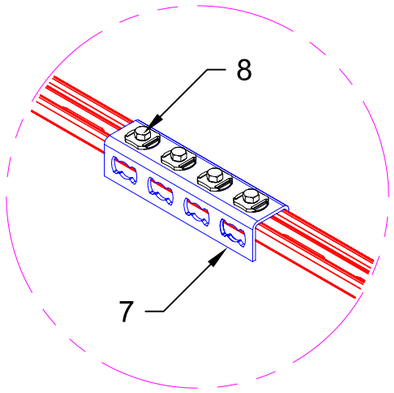

03 SPLICE DETAIL
N.T.S.

NOTE(S):

1. PRELIMINARY NOT FOR CONSTRUCTION
2. DESIGN ASSUMPTIONS:
   a. DESIGN LOADS (STATIC, U.N.O.):
      DL: 1070 LBS
   b. LATERAL LOADS NOT CONSIDERED
   c. CORROSION RESISTANCE REQD.: HDG
3. ALL LOADS ASSUMED TO ACT AT CENTER OF PIPE(S), U.N.O.
4. REFER TO COMPONENT MANUFACTURER'S IFUs FOR REQUIRED INSTALLATION INFO.
5. E.O.R. MUST BE NOTIFIED OF ANY DEVIATIONS FROM EXISTING SUBSTRATE CONDITIONS SHOWN HEREIN TO VALIDATE ACCEPTANCE OF THIS HILTI DESIGN PRIOR TO INSTALLATION.
6. ADEQUACY/COMPATIBILITY OF NON-PENETRATING SUPPORT PAD WITH MI SYSTEM NOT VERIFIED BY HILTI.
7. E.O.R. SHALL VERIFY OVERALL MI SUPPORT SYSTEM STABILITY.

All loading and design criteria supplied by customer is assumed accurate. Only the stated Design Assumptions were considered, and must be verified by the responsible Engineer of Record (EOR). The basis of Hilti component and connection design is the published data in the current Hilti Technical Guide, including material and cross-section properties, allowable load values, factors of safety, methods of calculation, and limiting factors. The EOR must verify suitability for any specific application, and the capacity of the supportive structure to receive the shown configuration and associated reaction loads. Modification to components and/or design may alter performance and must be evaluated by the EOR.

TYPICAL DETAIL TYPE:

PIPE SUPPORT

TYPICAL DETAIL DESCRIPTION:

GOALPOST - SINGLE

DESIGNED BY:	REVIEWED BY:
KL	AJV
DRAWN BY:	ISSUE DATE:
HAM	09 DEC 14

REVISIONS:

NO:	DESCRIPTION:	DATE:
A	ORIGINAL ISSUE	09 DEC 14

TYPICAL DETAIL NOMENCLATURE:

P-GP11-N/A

DRAWING NUMBER:	SHEET:
01	1/1

\\hilti.com\us\TEAMS\Installations\Projects\TYPICALS\TYPICAL LIBRARY\PIPING (P)\CAD\P-GP11-NA.dwg, 12/29/2014 3:00:57 PM

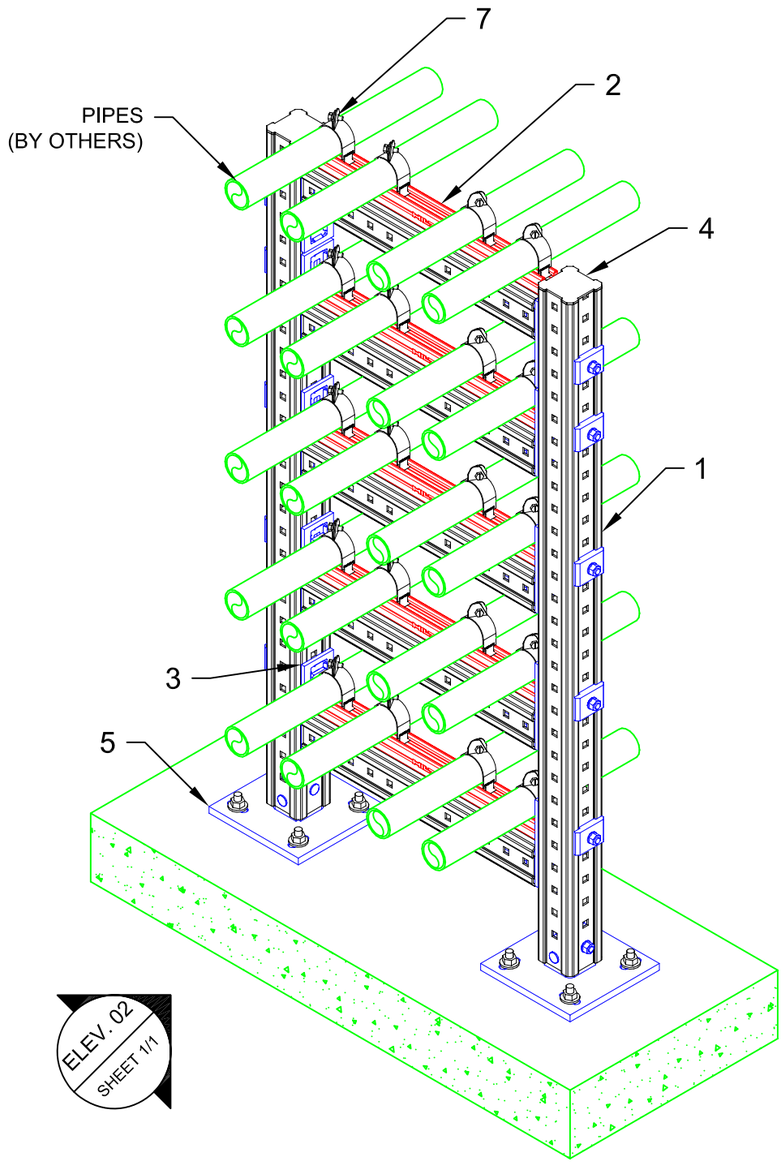

01 ISOMETRIC
N.T.S.

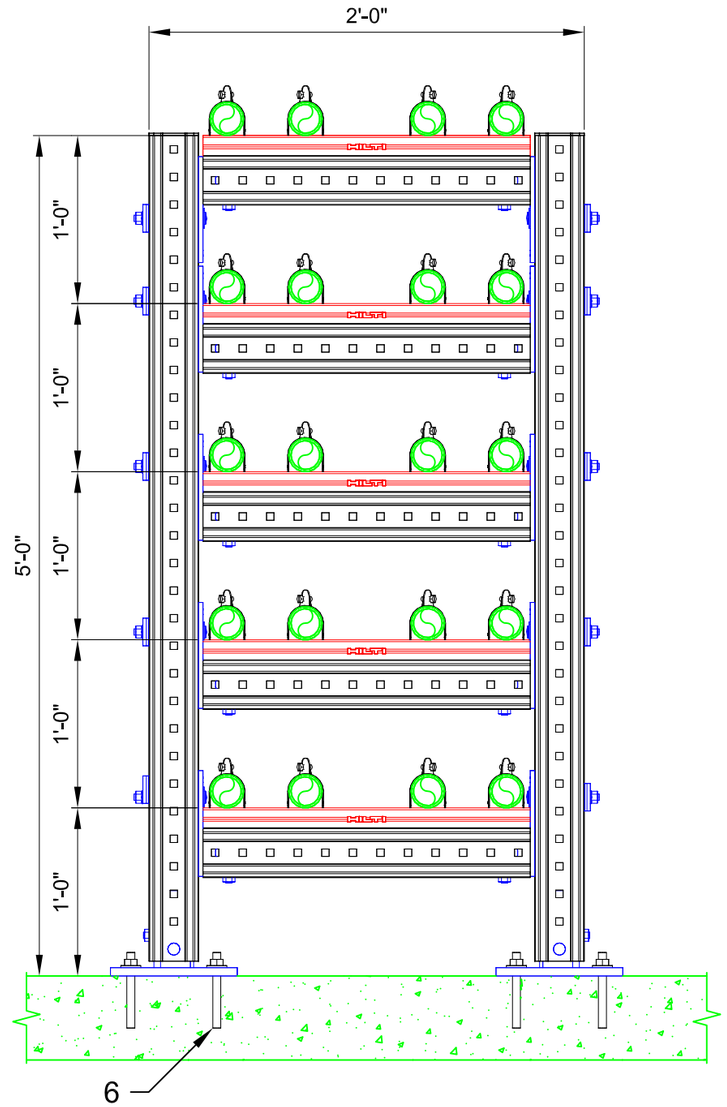

02 ELEVATION
N.T.S.

No.	Unit Qty	Unit	Description	Box Qty	# Boxes Needed	Item No.
1	AS REQ'D	EA	GIRDER MI-90 3M	1	AS REQ'D	304798
2	AS REQ'D	EA	STRUT HS-158-12/HDG 10'	1	AS REQ'D	407570
3	10	EA	CONNECTOR MIC-90-U	4	3	304803
4	2	EA	GIRDER END CAP MIA-EC90	25	1	432077
5	2	EA	CONNECTOR MIC-C90-D CONCRETE	2	1	304827
6	8	EA	USE KB3 OR KB-TZ AS APPROPRIATE	VARIES	VARIES	VARIES
7	20	EA	MH-R45 STRUT CLAMP	VARIES	VARIES	VARIES

NOTE(S):

1. PRELIMINARY NOT FOR CONSTRUCTION
2. DESIGN ASSUMPTIONS:
   a. DESIGN LOADS (STATIC, U.N.O.):
      DL: SELF WEIGHT
      PIPE LOAD: 2" SCH. 40 PIPE WITH 2 1/2" INSULATION.
   b. LATERAL LOADS NOT CONSIDERED
   c. BUILDING CODE: IBC 2012
   d. CORROSION RESISTANCE REQD.: HDG
   e. MAX. SUPPORT SPACING = 10'-0"
3. ALL LOADS ASSUMED TO ACT AT CENTER OF PIPE(S), U.N.O.
4. REFER TO COMPONENT MANUFACTURER'S IFUs FOR REQUIRED INSTALLATION INFO.
5. E.O.R. MUST BE NOTIFIED OF ANY DEVIATIONS FROM EXISTING/ NEW SUBSTRATE CONDITIONS SHOWN HEREIN TO VALIDATE ACCEPTANCE OF THIS HILTI DESIGN PRIOR TO INSTALLATION.

All loading and design criteria supplied by customer is assumed accurate. Only the stated Design Assumptions were considered, and must be verified by the responsible Engineer of Record (EOR). The basis of Hilti component and connection design is the published data in the current Hilti Technical Guide, including material and cross-section properties, allowable load values, factors of safety, methods of calculation, and limiting factors. The EOR must verify suitability for any specific application, and the capacity of the supportive structure to receive the shown configuration and associated reaction loads. Modification to components and/or design may alter performance and must be evaluated by the EOR.

TYPICAL DETAIL TYPE:

PIPE SUPPORT

TYPICAL DETAIL DESCRIPTION:

GOALPOST - MULTI

DESIGNED BY:	REVIEWED BY:
KL	AJV
DRAWN BY:	ISSUE DATE:
HAM	09 DEC 14

REVISIONS:

NO:	DESCRIPTION:	DATE:
A	ORIGINAL ISSUE	09 DEC 14

TYPICAL DETAIL NOMENCLATURE:

P-GP41-C

DRAWING NUMBER:	SHEET:
01	1/1

\\hilti.com\us\TEAMS\Installations\Projects\TYPICALS\TYPICAL LIBRARY\PIPING (P)\CAD\P-GP41-C.dwg, 12/29/2014 3:02:02 PM

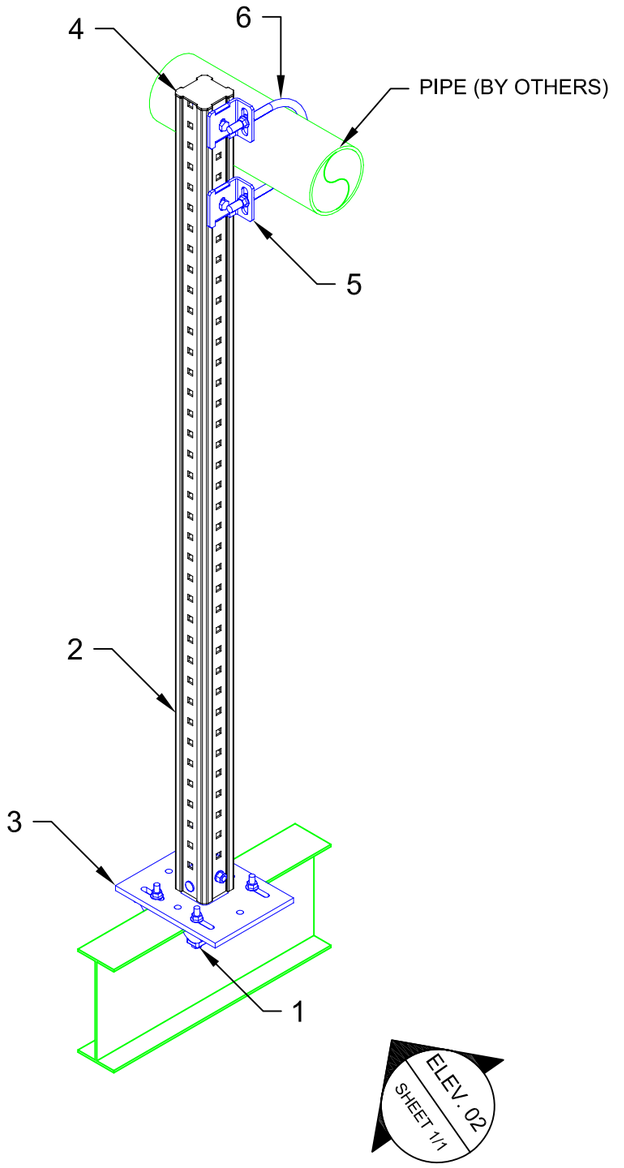

01 ISOMETRIC
N.T.S.

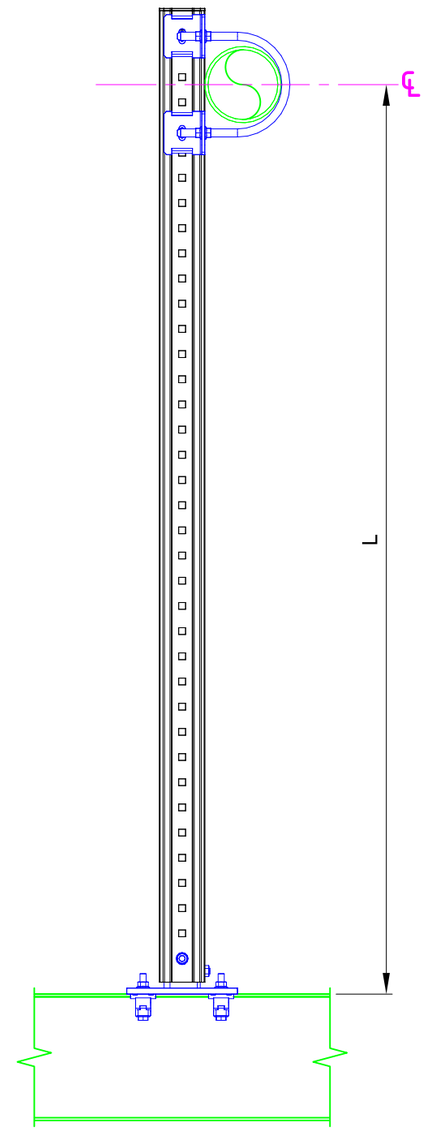

02 ELEVATION
N.T.S.

MIC-S90-X

Beam Width Table

Z	'B' Width	Item No.
A	2.9 to 6.5	304812
B	6.5 to 9.2	304813
C	9.2 to 11.8	304814

No.	Unit Qty	Unit	Description	Box Qty	# Boxes Needed	Item No.
1	4	EA	BEAM CLAMP MI-SGC-M12	16	1	233859
2	AS REQ'D	EA	GIRDER MI-90 3M	1	AS REQ'D	304798
3	1	EA	CONNECTOR MIC-S90-X STEEL (SEE TABLE)	2	1	VARIES
4	1	EA	GIRDER END CAP MIA-EC90	25	1	432077
5	1	EA	CONNECTOR U-BOLT MIC-UB90-M12	10	1	304831
6	1	EA	U-BOLT	VARIES	VARIES	SPECIAL

NOTE(S):

1. PRELIMINARY NOT FOR CONSTRUCTION
2. DESIGN ASSUMPTIONS:
   a. NO LOADS CONSIDERED - CONCEPT ONLY
   b. LATERAL LOADS NOT CONSIDERED
   c. BUILDING CODE: NOT SPECIFIED
   d. CORROSION RESISTANCE REQD.: HDG
3. ALL LOADS ASSUMED TO ACT AT CENTER OF PIPE(S), U.N.O.
4. REFER TO COMPONENT MANUFACTURER'S IFUs FOR REQUIRED INSTALLATION INFO.
5. E.O.R. MUST BE NOTIFIED OF ANY DEVIATIONS FROM EXISTING/ NEW SUBSTRATE CONDITIONS SHOWN HEREIN TO VALIDATE ACCEPTANCE OF THIS HILTI DESIGN PRIOR TO INSTALLATION.
6. POST INSTALLED ANCHORS BASED ON 3,000 PSI UNCRACKED CONCRETE WITH SUFFICIENT DEPTH AND AREA FOR INSTALLATION. FIELD VERIFY.

All loading and design criteria supplied by customer is assumed accurate. Only the stated Design Assumptions were considered, and must be verified by the responsible Engineer of Record (EOR). The basis of Hilti component and connection design is the published data in the current Hilti Technical Guide, including material and cross-section properties, allowable load values, factors of safety, methods of calculation, and limiting factors. The EOR must verify suitability for any specific application, and the capacity of the supportive structure to receive the shown configuration and associated reaction loads. Modification to components and/or design may alter performance and must be evaluated by the EOR.

TYPICAL DETAIL TYPE:

PIPE SUPPORTS

TYPICAL DETAIL DESCRIPTION:

POST

DESIGNED BY:	REVIEWED BY:
KL	AJV
DRAWN BY:	ISSUE DATE:
HAM	10 DEC 14

REVISIONS:

NO:	DESCRIPTION:	DATE:
A	ORIGINAL ISSUE	10 DEC 14

TYPICAL DETAIL NOMENCLATURE:

P-P06-S

DRAWING NUMBER:	SHEET:
01	1/1

\\hilti.com\us\TEAMS\Installations\Projects\TYPICALS\TYPICAL LIBRARY\PIPING (P)\CAD\P-P06-S.dwg, 12/29/2014 3:06:42 PM

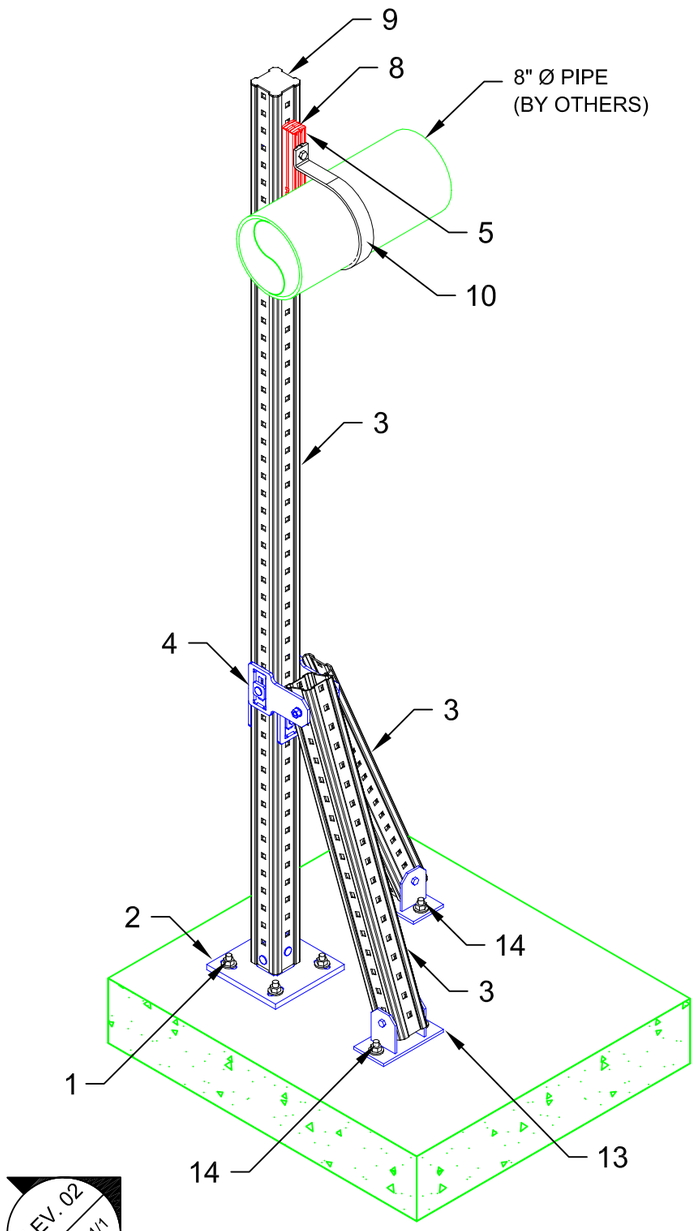

01 ISOMETRIC
N.T.S.

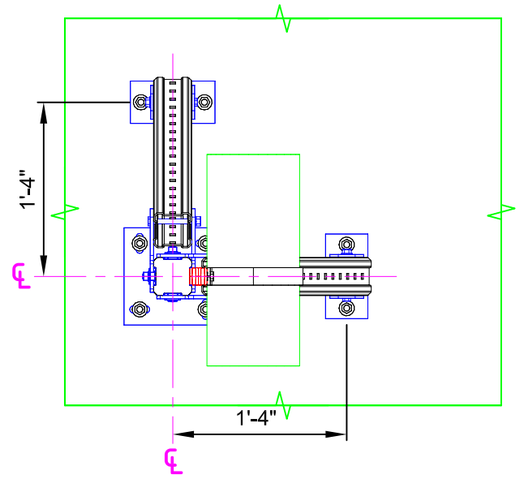

03 PLAN VIEW
N.T.S.

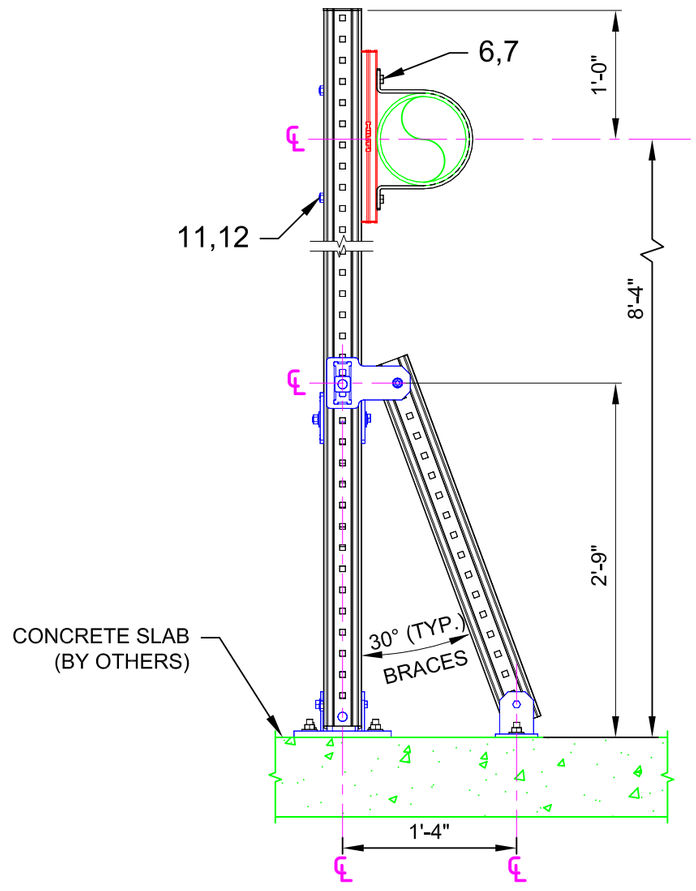

02 ELEVATION
N.T.S.

No.	Unit Qty	Unit	Description	Box Qty	# Boxes Needed	Item No.
1	4	EA	STD STUD ANCHOR KB-TZ 5/8X6 (3-1/4 EMBED.)	15	1	387517
2	1	EA	CONNECTOR MIC-C90-D CONCRETE	2	1	304827
3	AS REQ'D	EA	GIRDER MI-90 6M	1	AS REQ'D	304799
4	2	PR	CONNECTOR MIC-U-MA	2	1	304806
5	AS REQ'D	EA	STRUT HS-158-12/PG 20'	1	AS REQ'D	407557
6	2	EA	HEX HEAD BOLT 1/2" x 1-1/2"	50	1	411768
7	2	EA	WING NUT MQM-F1/2"	50	1	377883
8	4	EA	CHANNEL END CAP MEK RED	50	1	244886
9	1	EA	GIRDER END CAP MIA-EC90	25	1	432077
10	1	EA	PIPE STRAP PS2 8" (#PS2 0800EG)	VARIES	VARIES	SPECIAL
11	2	EA	ONEHAND SCREW MIA-OH90	10	AS REQ'D	304889
12	2	EA	MI HEX NUT M12-F-SL-WS 3/4"	100	AS REQ'D	382897
13	2	EA	CONNECTOR MIC-CU-MA CONCRETE	4	1	304828
14	4	EA	STD STUD ANCHOR KB-TZ 1/2X51/2 (3-1/4 EMBED.)	20	1	387514

NOTE(S):

1. PRELIMINARY NOT FOR CONSTRUCTION
2. DESIGN ASSUMPTIONS:
   a. NO LOADS CONSIDERED - CONCEPT ONLY
   b. LATERAL LOADS CONSIDERED AS PER NFPA
   c. BUILDING CODE: IBC 2006 & ASCE 7-05
   d. CORROSION RESISTANCE REQD.: HDG / EG
3. ALL LOADS ASSUMED TO ACT AT CENTER OF PIPE(S), U.N.O.
4. REFER TO COMPONENT MANUFACTURER'S IFUs FOR REQUIRED INSTALLATION INFO.

All loading and design criteria supplied by customer is assumed accurate. Only the stated Design Assumptions were considered, and must be verified by the responsible Engineer of Record (EOR). The basis of Hilti component and connection design is the published data in the current Hilti Technical Guide, including material and cross-section properties, allowable load values, factors of safety, methods of calculation, and limiting factors. The EOR must verify suitability for any specific application, and the capacity of the supportive structure to receive the shown configuration and associated reaction loads. Modification to components and/or design may alter performance and must be evaluated by the EOR.

TYPICAL DETAIL TYPE:

PIPE SUPPORT

TYPICAL DETAIL DESCRIPTION:

POST

DESIGNED BY:	REVIEWED BY:
KL	AJV
DRAWN BY:	ISSUE DATE:
HAM	09 DEC 14

REVISIONS:

NO:	DESCRIPTION:	DATE:
A	ORIGINAL ISSUE	09 DEC 14

TYPICAL DETAIL NOMENCLATURE:

P-P16-C

DRAWING NUMBER:	SHEET:
01	1/1

\\hilti.com\us\TEAMS\installations\Projects\TYPICALS\TYPICAL LIBRARY\PIPING (P)\CAD\P-P16-C.dwg, 12/29/2014 2:03:25 PM

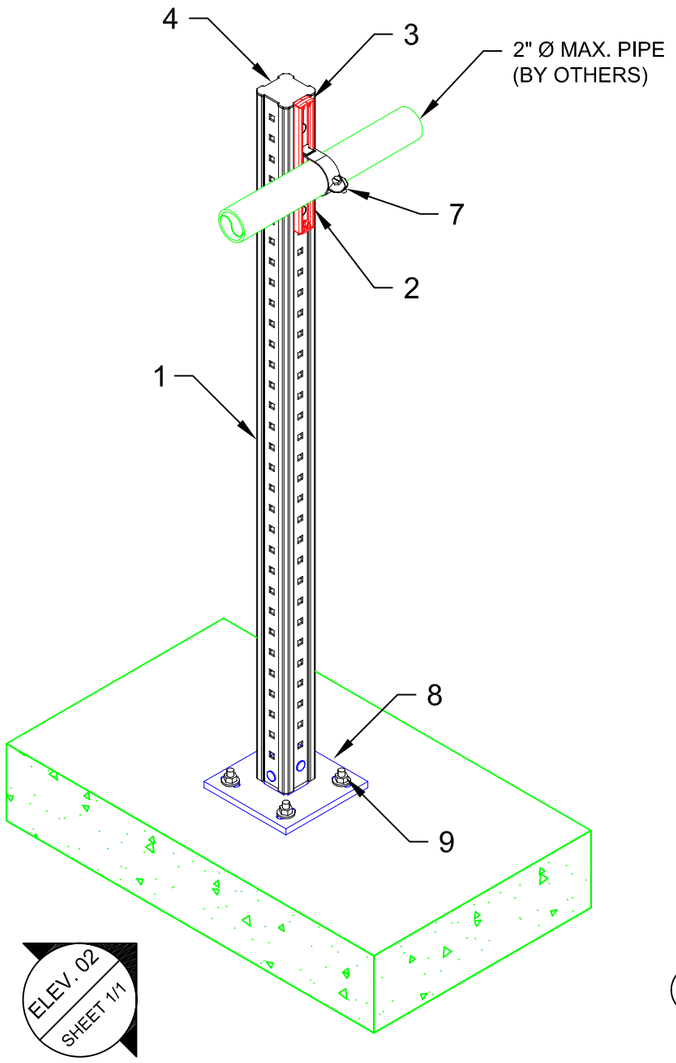

01 ISOMETRIC-CONCRETE OPTION
N.T.S.

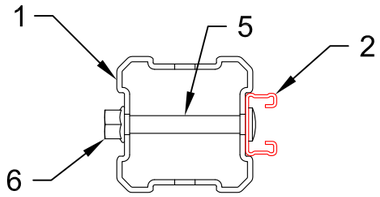

04 SECTION
N.T.S.

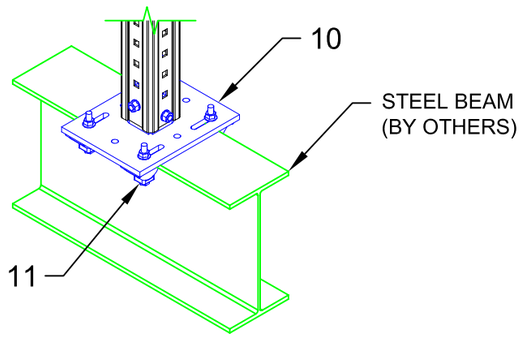

03 ISOMETRIC-STEEL OPTION
N.T.S.

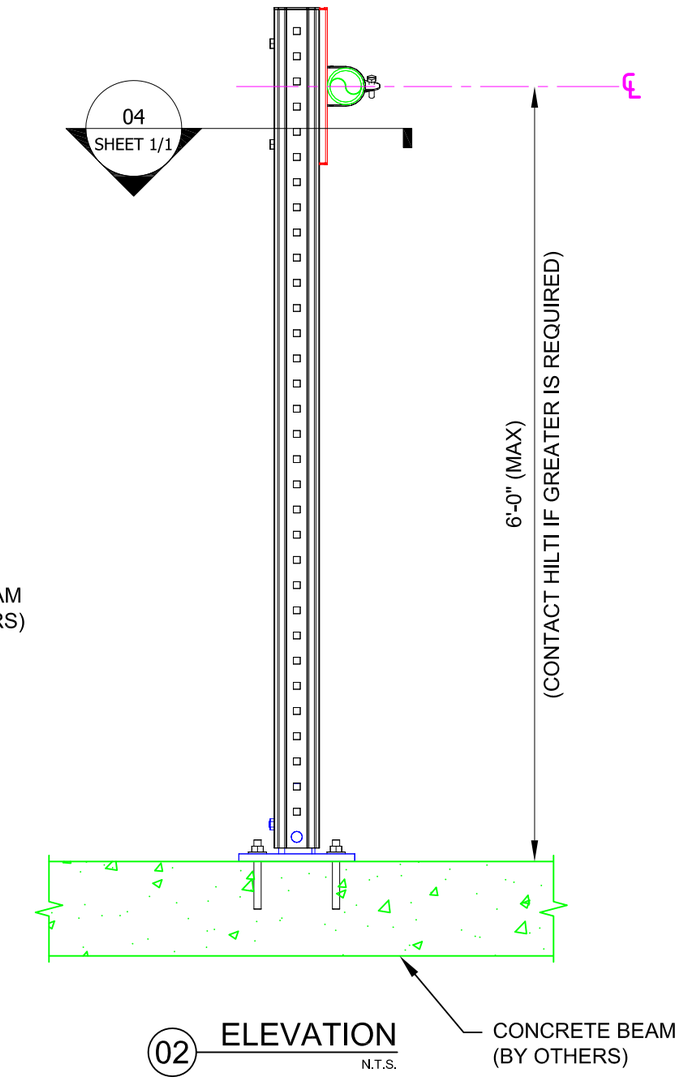

02 ELEVATION
N.T.S.

MH-R45 Strut Clamps	
Pipe Size	Item No.
1/2"	2008810
3/4"	2008811
1"	2008812
1-1/4"	2008813
1-1/2"	2008814
2"	2008815

No.	Unit Qty	Unit	Description	Box Qty	# Boxes Needed	Item No.
1	AS REQ'D	EA	GIRDER MI-90 3M	1	AS REQ'D	304798
2	AS REQ'D	EA	STRUT HS-1316-12/PG 10'	1	AS REQ'D	407543
3	2	EA	CHANNEL END CAP MEK RED	50	1	244886
4	1	EA	GIRDER END CAP MIA-EC90	25	1	432077
5	2	EA	ONEHAND SCREW MIA-OH90	10	1	304889
6	2	EA	MI HEX NUT M12-F-SL-WS 3/4"	100	1	382897
7	1	EA	STRUT CLAMP SC 45-RIGID (SEE TABLE)	VARIES	VARIES	VARIES
Concrete Option						
8	1	EA	CONNECTOR MIC-C90-D CONCRETE	2	1	304827
9	4	EA	USE KB3 OR KB-TZ AS APPROPRIATE	VARIES	VARIES	VARIES
Steel Option						
10	1	EA	CONNECTOR MIC-S90-X STEEL (SEE TABLE)	VARIES	VARIES	VARIES
11	4	EA	BEAM CLAMP MI-SGC-M12	16	1	233859

MIC-S90-X

Beam Width Table

X	'B' Width	Item No.
A	2.9 to 6.5	304812
B	6.5 to 9.2	304813
C	9.2 to 11.8	304814

NOTE(S):

1. PRELIMINARY NOT FOR CONSTRUCTION
2. DESIGN ASSUMPTIONS:
   a. DESIGN LOADS (STATIC, U.N.O.):
      DL: 50 LBS (FOR 1/2" AND 3/4" PIPE CLAMP)
      75 LBS (FOR 1" AND 1 1/4" PIPE CLAMP)
      100 LBS (FOR 1 1/2" AND 2" PIPE CLAMP)
   b. LATERAL LOADS NOT CONSIDERED
   c. BUILDING CODE: NOT SPECIFIED
   d. CORROSION RESISTANCE REQD.: NOT SPECIFIED
3. ALL LOADS ASSUMED TO ACT AT CENTER OF PIPE(S), U.N.O.
4. REFER TO COMPONENT MANUFACTURER'S IFUs FOR REQUIRED INSTALLATION INFO.
5. E.O.R. MUST BE NOTIFIED OF ANY DEVIATIONS FROM EXISTING/ NEW SUBSTRATE CONDITIONS SHOWN HEREIN TO VALIDATE ACCEPTANCE OF THIS HILTI DESIGN PRIOR TO INSTALLATION.

All loading and design criteria supplied by customer is assumed accurate. Only the stated Design Assumptions were considered, and must be verified by the responsible Engineer of Record (EOR). The basis of Hilti component and connection design is the published data in the current Hilti Technical Guide, including material and cross-section properties, allowable load values, factors of safety, methods of calculation, and limiting factors. The EOR must verify suitability for any specific application, and the capacity of the supportive structure to receive the shown configuration and associated reaction loads. Modification to components and/or design may alter performance and must be evaluated by the EOR.

TYPICAL DETAIL TYPE:

PIPE SUPPORT

TYPICAL DETAIL DESCRIPTION:

POST

DESIGNED BY:	REVIEWED BY:
KL	AJV
DRAWN BY:	ISSUE DATE:
HAM	09 DEC 14

REVISIONS:

NO:	DESCRIPTION:	DATE:
A	ORIGINAL ISSUE	09 DEC 14

TYPICAL DETAIL NOMENCLATURE:

P-P17-C/S

DRAWING NUMBER:	SHEET:
01	1/1

\\hilti.com\us\TEAMS\installations\Projects\TYPICALS\TYPICAL LIBRARY\PIPING (P)\CAD\P-P17-CS.dwg, 12/23/2014 3:03:20 PM

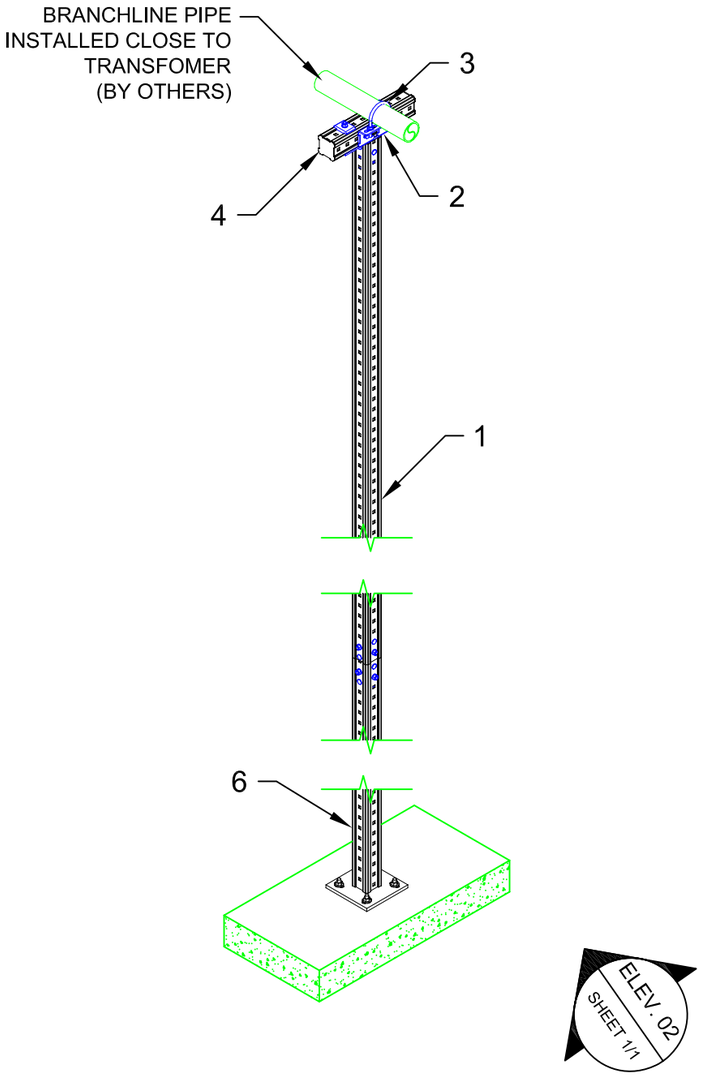

01 ISOMETRIC
N.T.S.

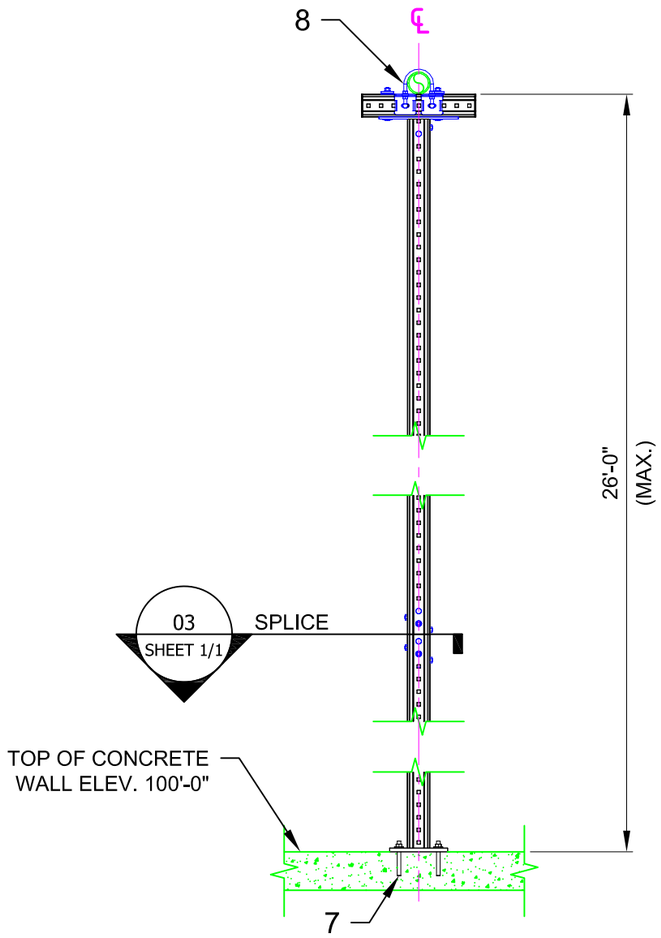

02 ELEVATION
N.T.S.

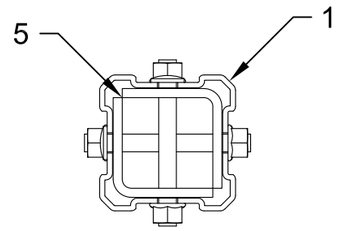

03 SECTION
N.T.S.

No.	Unit Qty	Unit	Description	Box Qty	# Boxes Needed	Item No.
1	AS REQ'D	EA	GIRDER MI-90 6M	1	AS REQ'D	304799
2	1	EA	CONNECTOR MIC-90-L	2	1	304805
3	2	PR	CONNECTOR U-BOLT MIC-UB90-M12	10	1	304831
4	3	EA	GIRDER END CAP MIA-EC90	25	1	432077
5	1	EA	CONNECTOR MIC-90-E	2	1	304809
6	1	EA	CONNECTOR MIC-C90-D-2000 WELDED BRACKET	1	1	267793
7	4	EA	USE KB3 OR KB-TZ AS APPROPRIATE	VARIES	VARIES	VARIES
8	1	EA	U-BOLT	VARIES	VARIES	SPECIAL

NOTE(S):

1. PRELIMINARY NOT FOR CONSTRUCTION
2. DESIGN ASSUMPTIONS:
   a. DESIGN LOADS (STATIC, U.N.O.):
      DL: SCHEDULE 40 PIPE FULL OF WATER
      EL: NO SEISMIC
   b. LATERAL LOADS NOT CONSIDERED
   c. BUILDING CODE: IBC 2012
   d. CORROSION RESISTANCE REQD.: HDG
   e. MAX. SUPPORT SPACING = PER NFPA TABLE 6.3.2.2.2"
3. ALL LOADS ASSUMED TO ACT AT CENTER OF PIPE(S), U.N.O.
4. REFER TO COMPONENT MANUFACTURER'S IFUs FOR REQUIRED INSTALLATION INFO.
5. E.O.R. MUST BE NOTIFIED OF ANY DEVIATIONS FROM EXISTING/ NEW SUBSTRATE CONDITIONS SHOWN HEREIN TO VALIDATE ACCEPTANCE OF THIS HILTI DESIGN PRIOR TO INSTALLATION.

All loading and design criteria supplied by customer is assumed accurate. Only the stated Design Assumptions were considered, and must be verified by the responsible Engineer of Record (EOR). The basis of Hilti component and connection design is the published data in the current Hilti Technical Guide, including material and cross-section properties, allowable load values, factors of safety, methods of calculation, and limiting factors. The EOR must verify suitability for any specific application, and the capacity of the supportive structure to receive the shown configuration and associated reaction loads. Modification to components and/or design may alter performance and must be evaluated by the EOR.

TYPICAL DETAIL TYPE:

PIPE SUPPORT

TYPICAL DETAIL DESCRIPTION:

T-POST

DESIGNED BY:	REVIEWED BY:
KL	AJV
DRAWN BY:	ISSUE DATE:
HAM	10 DEC 14

REVISIONS:

NO:	DESCRIPTION:	DATE:
A	ORIGINAL ISSUE	10 DEC 14

TYPICAL DETAIL NOMENCLATURE:

P-TP04-C

DRAWING NUMBER:	SHEET:
01	1/1

\\hilti.com\us\TEAMS\Installations\Projects\TYPICALS\TYPICAL LIBRARY\PIPING (P)\CAD\P-TP04-C.dwg, 12/29/2014 3:10:36 PM

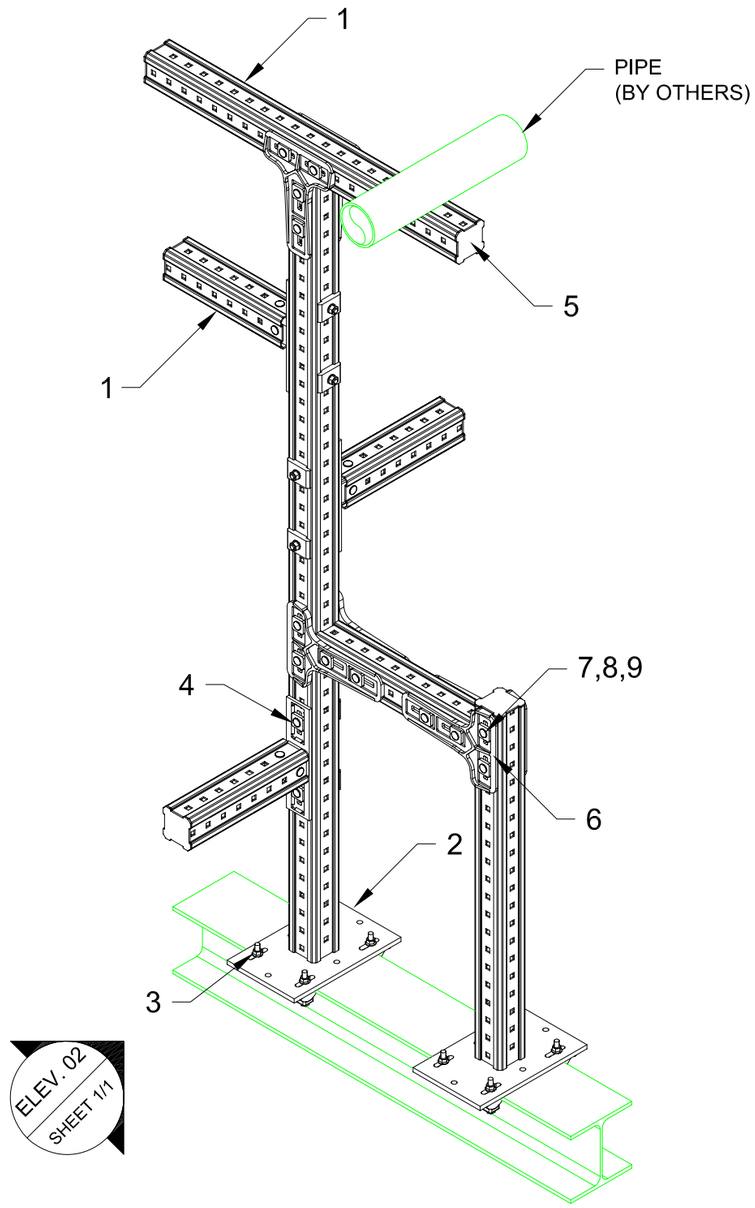

01 ISOMETRIC
N.T.S.

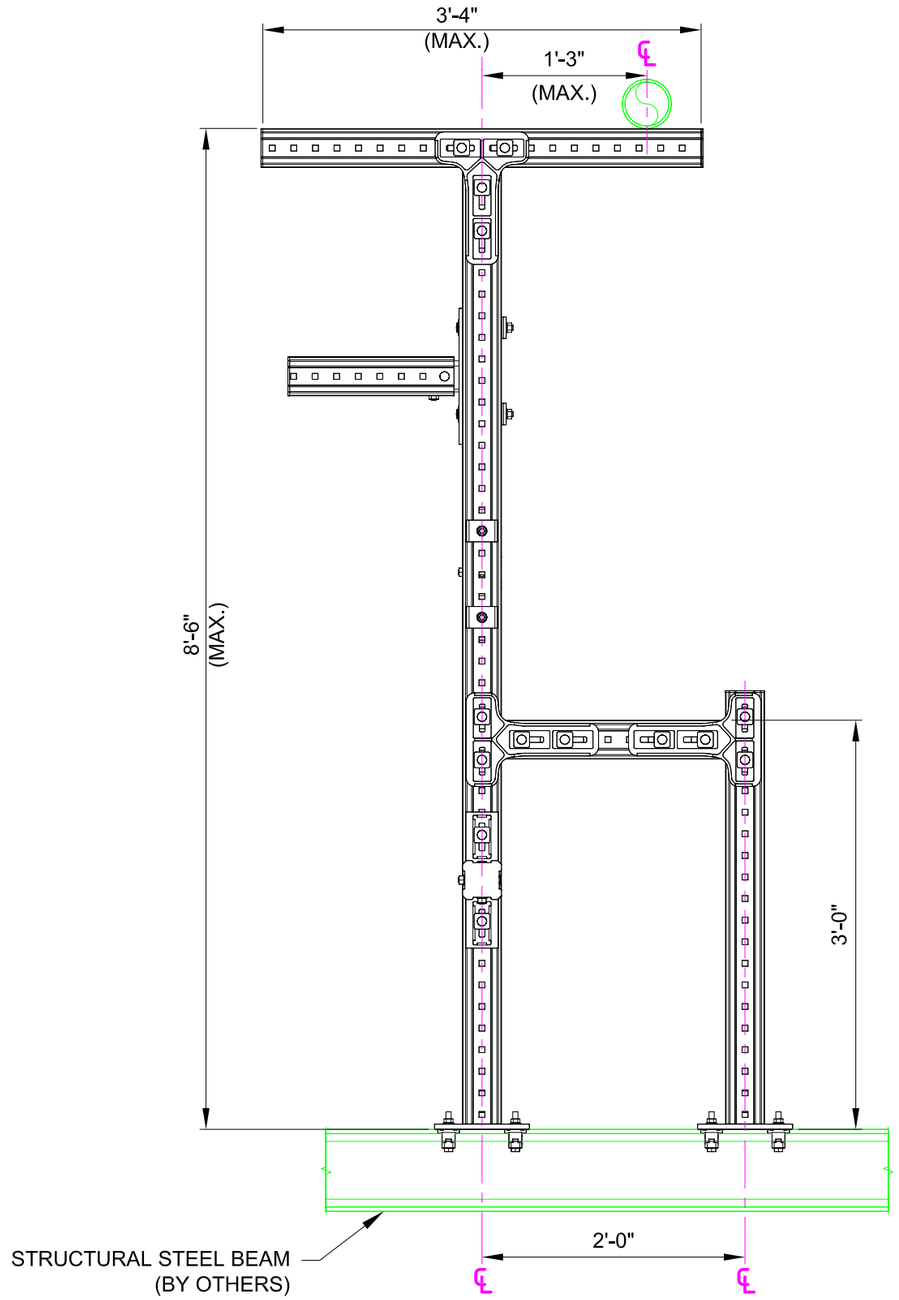

02 ELEVATION
N.T.S.

No.	Unit Qty	Unit	Description	Box Qty	# Boxes Needed	Item No.
1	AS REQ'D	EA	GIRDER MI-90 3M	1	AS REQ'D	304798
2	2	EA	MIC-S90-B-2000 (#267783)	1	1	SPECIAL
3	8	EA	BEAM CLAMP MI-SGC-M12	16	1	233859
4	3	EA	CONNECTOR MIC-90-L	2	2	304805
5	6	EA	GIRDER END CAP MIA-EC90	25	1	432077
6	3	EA	CONNECTOR MIC-90-LH	3	1	2048107
7	12	EA	EASYHAND SCREW MIA-EH90	10	2	304887
8	12	EA	TOOTHED PLATE MIA-TP	20	1	305707
9	12	EA	MI HEX NUT M12-F-SL-WS 3/4"	100	1	382897

NOTE(S):

1. PRELIMINARY NOT FOR CONSTRUCTION
2. DESIGN ASSUMPTIONS:
   a. DESIGN LOADS (STATIC, U.N.O.):
      DL: ≤3" Ø STD. PIPE: 200 lbs.
      WL: 40 psf (TRANSVERSE)
      EL: 0.10 g (LONGITUDINAL)
   b. BUILDING CODE: IBC 2006
   c. CORROSION RESISTANCE REQD.: HDG
3. MAX. SUPPORT SPACING = SEE SUPPORT SPACING TABLE 4.5 IN DOCUMENT M-2-3.
4. ALL LOADS ASSUMED TO ACT AT CENTER OF PIPE(S), U.N.O.
5. REFER TO COMPONENT MANUFACTURER'S IFUs FOR REQUIRED INSTALLATION INFO.
6. E.O.R. MUST BE NOTIFIED OF ANY DEVIATIONS FROM EXISTING/ NEW SUBSTRATE CONDITIONS SHOWN HEREIN TO VALIDATE ACCEPTANCE OF THIS HILTI DESIGN PRIOR TO INSTALLATION.

All loading and design criteria supplied by customer is assumed accurate. Only the stated Design Assumptions were considered, and must be verified by the responsible Engineer of Record (EOR). The basis of Hilti component and connection design is the published data in the current Hilti Technical Guide, including material and cross-section properties, allowable load values, factors of safety, methods of calculation, and limiting factors. The EOR must verify suitability for any specific application, and the capacity of the supportive structure to receive the shown configuration and associated reaction loads. Modification to components and/or design may alter performance and must be evaluated by the EOR.

TYPICAL DETAIL TYPE:

PIPE SUPPORT

TYPICAL DETAIL DESCRIPTION:

T-POST

DESIGNED BY:	REVIEWED BY:
KL	AJV
DRAWN BY:	ISSUE DATE:
HAM	10 DEC 14

REVISIONS:

NO:	DESCRIPTION:	DATE:
A	ORIGINAL ISSUE	10 DEC 14

TYPICAL DETAIL NOMENCLATURE:

P-TP21-S

DRAWING NUMBER:	SHEET:
01	1/1

\\hilti.com\us\TEAMS\Installations\Projects\TYPICALS\TYPICAL LIBRARY\PIPING (P)\CAD\P-TP21-S.dwg, 12/29/2014 3:11:33 PM

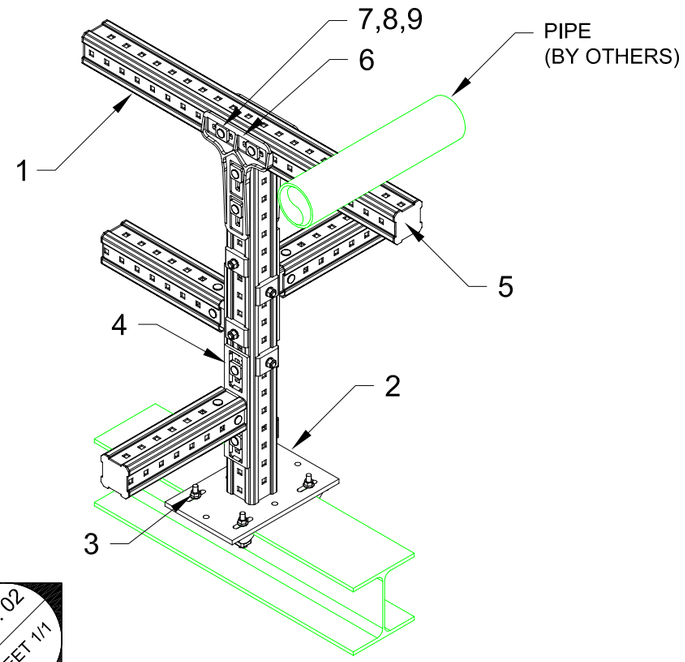

ELEV. 02
SHEET 1/1

01 ISOMETRIC
N.T.S.

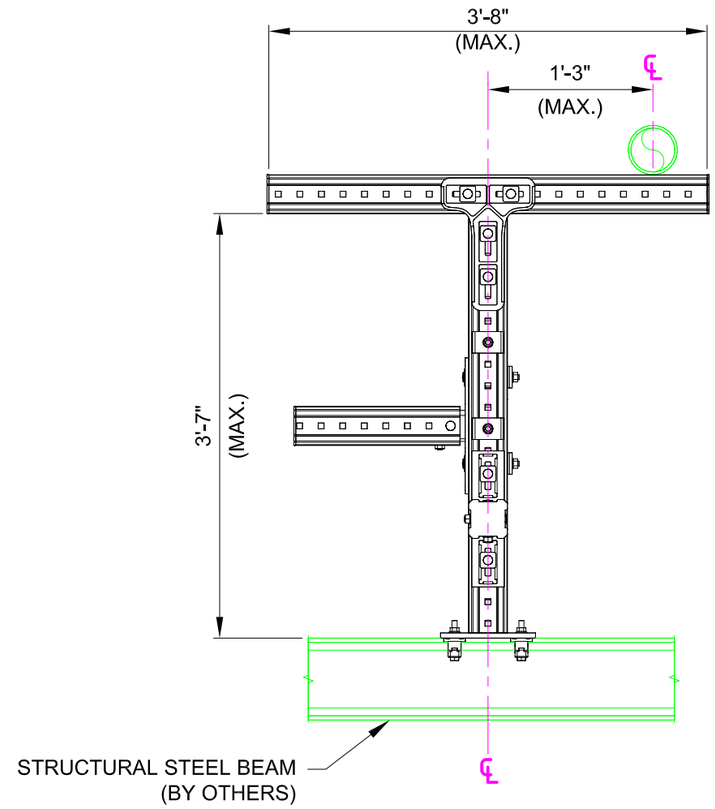

02 ELEVATION
N.T.S.

No.	Unit Qty	Unit	Description	Box Qty	# Boxes Needed	Item No.
1	AS REQ'D	EA	GIRDER MI-90 3M	1	AS REQ'D	304798
2	1	EA	MIC-S90-B-1000 (#267781)	1	1	SPECIAL
3	4	EA	BEAM CLAMP MI-SGC-M12	16	1	233859
4	3	EA	CONNECTOR MIC-90-L	2	2	304805
5	5	EA	GIRDER END CAP MIA-EC90	25	1	432077
6	1	EA	CONNECTOR MIC-90-LH	3	1	2048107
7	4	EA	EASYHAND SCREW MIA-EH90	10	1	304887
8	4	EA	TOOTHED PLATE MIA-TP	20	1	305707
9	4	EA	MI HEX NUT M12-F-SL-WS 3/4"	100	1	382897

NOTE(S):

1. PRELIMINARY NOT FOR CONSTRUCTION
2. DESIGN ASSUMPTIONS:
   a. DESIGN LOADS (STATIC, U.N.O.):
      DL: 6" Ø STD. PIPE: 480 lbs.
      WL: 40 psf (TRANSVERSE)
      EL: 0.10 g (LONGITUDINAL)
   b. BUILDING CODE: IBC 2006
   c. CORROSION RESISTANCE REQD.: HDG
3. MAX. SUPPORT SPACING = SEE SUPPORT SPACING TABLE 4.5 IN DOCUMENT M-2-3.
4. ALL LOADS ASSUMED TO ACT AT CENTER OF PIPE(S), U.N.O.
5. REFER TO COMPONENT MANUFACTURER'S IFUs FOR REQUIRED INSTALLATION INFO.
6. E.O.R. MUST BE NOTIFIED OF ANY DEVIATIONS FROM EXISTING/ NEW SUBSTRATE CONDITIONS SHOWN HEREIN TO VALIDATE ACCEPTANCE OF THIS HILTI DESIGN PRIOR TO INSTALLATION.

All loading and design criteria supplied by customer is assumed accurate. Only the stated Design Assumptions were considered, and must be verified by the responsible Engineer of Record (EOR). The basis of Hilti component and connection design is the published data in the current Hilti Technical Guide, including material and cross-section properties, allowable load values, factors of safety, methods of calculation, and limiting factors. The EOR must verify suitability for any specific application, and the capacity of the supportive structure to receive the shown configuration and associated reaction loads. Modification to components and/or design may alter performance and must be evaluated by the EOR.

TYPICAL DETAIL TYPE:

PIPE SUPPORT

TYPICAL DETAIL DESCRIPTION:

T-POST

DESIGNED BY:	REVIEWED BY:
KL	AJV
DRAWN BY:	ISSUE DATE:
HAM	10 DEC 14

REVISIONS:

NO:	DESCRIPTION:	DATE:
A	ORIGINAL ISSUE	10 DEC 14

TYPICAL DETAIL NOMENCLATURE:

P-TP23-S

DRAWING NUMBER:	SHEET:
01	1/1

\\hilti.com\us\TEAMS\Installations\Projects\TYPICALS\TYPICAL LIBRARY\PIPING (P)\CAD\P-TP23-S.dwg, 12/29/2014 3:12:47 PM

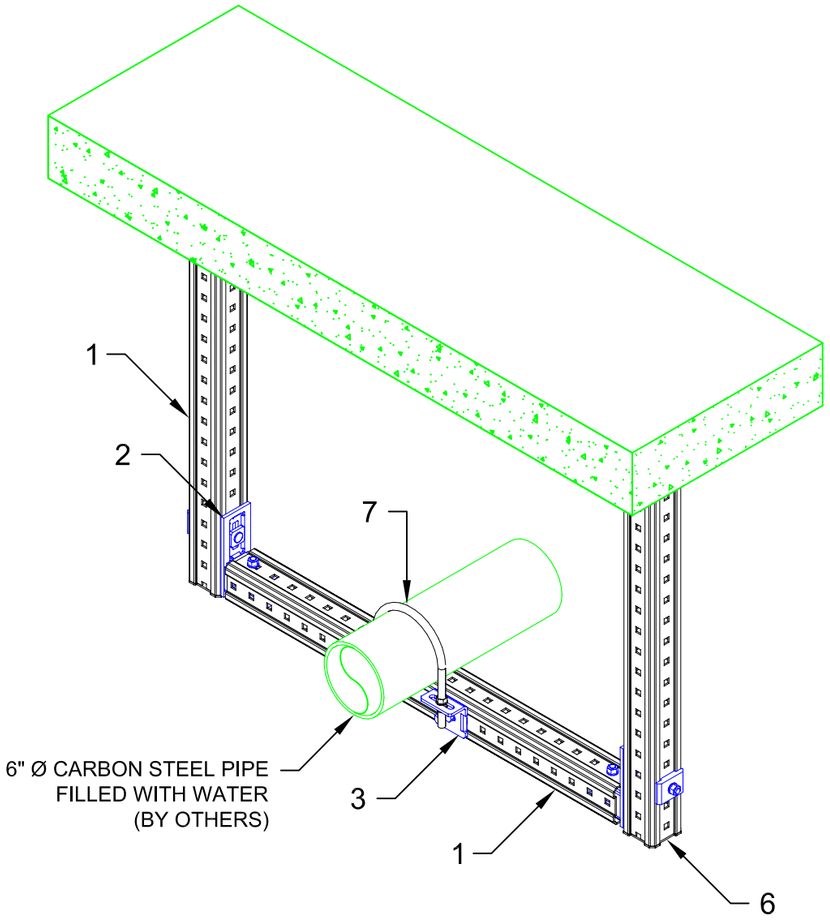

ELEV. 02
SHEET 1/1

01 ISOMETRIC
N.T.S.

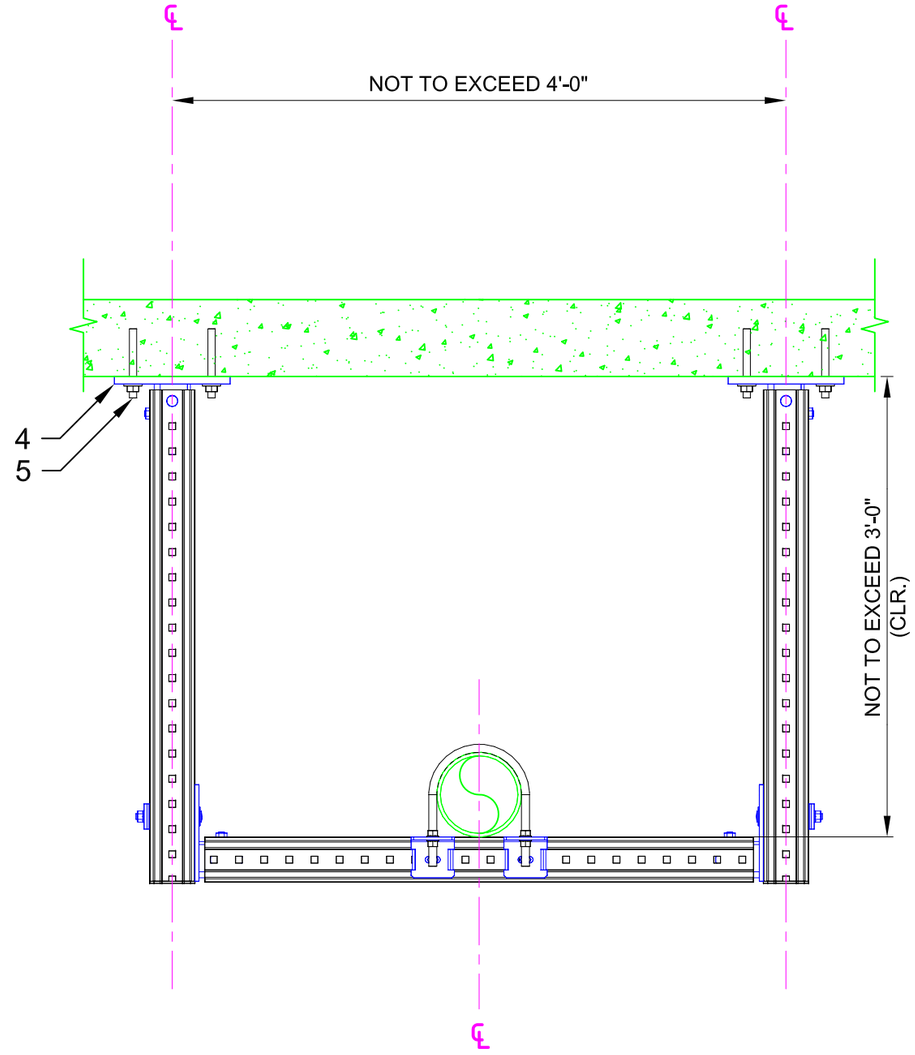

02 ELEVATION
N.T.S.

No.	Unit Qty	Unit	Description	Box Qty	# Boxes Needed	Item No.
1	AS REQ'D	EA	GIRDER MI-90 3M	1	AS REQ'D	304798
2	2	EA	CONNECTOR MIC-90-U	4	1	304803
3	1	PR	CONNECTOR U-BOLT MIC-UB90-M16	6	1	304834
4	2	EA	CONNECTOR MIC-C90-D CONCRETE	2	1	304827
5	8	EA	USE KB-TZ OR HDA AS APPROPRIATE	VARIES	VARIES	VARIES
6	2	EA	GIRDER END CAP MIA-EC90	25	1	432077
7	1	EA	U-BOLT FOR 6" PIPE, 5/8" MAX DIAMETER	SPECIAL	SPECIAL	SPECIAL

NOTE(S):
1. PRELIMINARY NOT FOR CONSTRUCTION
2. DESIGN ASSUMPTIONS:
   a. DESIGN LOADS (STATIC, U.N.O.):
      DL: SCH. 40 PIPE FILLED WITH WATER
   b. LATERAL LOADS NOT CONSIDERED
   c. BUILDING CODE: NOT SPECIFIED
   d. CORROSION RESISTANCE REQD.: NOT SPECIFIED
   e. MAX. SUPPORT SPACING = 10'-0"
3. ALL LOADS ASSUMED TO ACT AT CENTER OF PIPE(S), U.N.O.
4. REFER TO COMPONENT MANUFACTURER'S IFUs FOR REQUIRED INSTALLATION INFO.
5. E.O.R. MUST BE NOTIFIED OF ANY DEVIATIONS FROM EXISTING/ NEW SUBSTRATE CONDITIONS SHOWN HEREIN TO VALIDATE ACCEPTANCE OF THIS HILTI DESIGN PRIOR TO INSTALLATION.

All loading and design criteria supplied by customer is assumed accurate. Only the stated Design Assumptions were considered, and must be verified by the responsible Engineer of Record (EOR). The basis of Hilti component and connection design is the published data in the current Hilti Technical Guide, including material and cross-section properties, allowable load values, factors of safety, methods of calculation, and limiting factors. The EOR must verify suitability for any specific application, and the capacity of the supportive structure to receive the shown configuration and associated reaction loads. Modification to components and/or design may alter performance and must be evaluated by the EOR.

TYPICAL DETAIL TYPE:

PIPE SUPPORT

TYPICAL DETAIL DESCRIPTION:

TRAPEZE - SINGLE

DESIGNED BY: KL

REVIEWED BY: AJV

DRAWN BY: HAM

ISSUE DATE: 03 DEC 14

REVISIONS:

NO:	DESCRIPTION:	DATE:
A	ORIGINAL ISSUE	03 DEC 14

TYPICAL DETAIL NOMENCLATURE:

P-TR01-C

DRAWING NUMBER: 01

SHEET: 1/1

\\hilti.com\us\TEAMS\Installations\Projects\TYPICALS\TYPICAL LIBRARY\PIPING (P)\CAD\P-TR01-C.dwg, 12/29/2014 12:26:19 PM

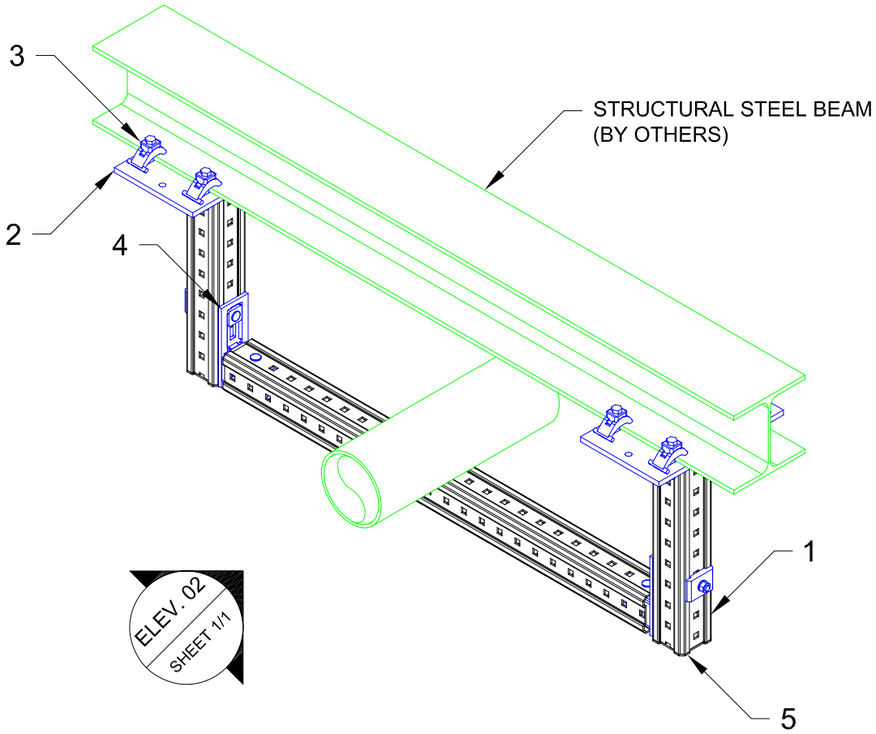

01 ISOMETRIC
N.T.S.

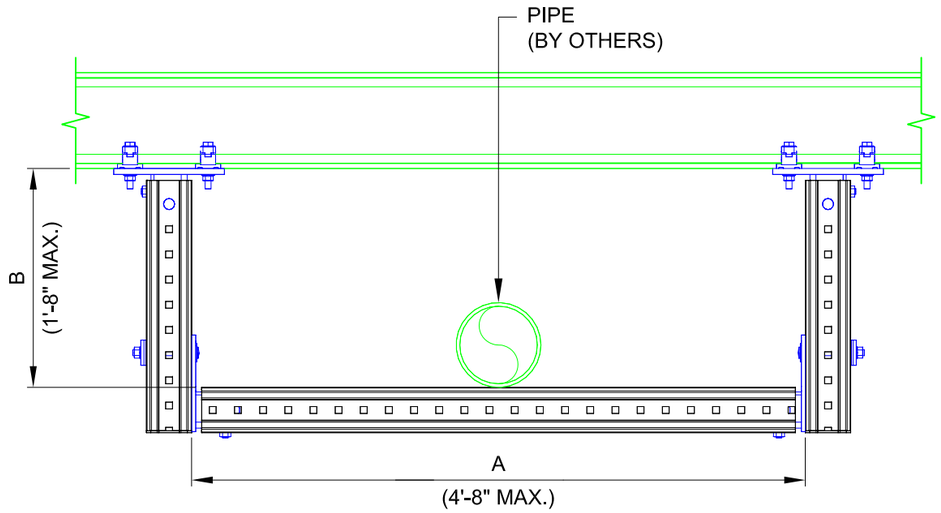

02 ELEVATION
N.T.S.

MIC-S90-X

Beam Width Table

X	'B' Width	Item No.
A	2.9 to 6.5	304812
B	6.5 to 9.2	304813
C	9.2 to 11.8	304814

No.	Unit Qty	Unit	Description	Box Qty	# Boxes Needed	Item No.
1	AS REQ'D	EA	GIRDER MI-90 3M	1	AS REQ'D	304798
2	2	EA	CONNECTOR MIC-S90-X STEEL	2	1	SEE TABLE
3	8	EA	BEAM CLAMP MI-SGC-M12	16	1	233859
4	2	EA	CONNECTOR MIC-90-U	4	1	304803
5	2	EA	GIRDER END CAP MIA-EC90	25	1	432077

NOTE(S):

1. PRELIMINARY NOT FOR CONSTRUCTION
2. DESIGN ASSUMPTIONS:
   a. DESIGN LOADS (STATIC, U.N.O.):
      DL: 6" Ø STD. PIPE: 480 lbs.
      WL: 40 PSF (TRANSVERSE)
      EL: 0.10g (LONGITUDINAL)
   b. BUILDING CODE: IBC 2006
   c. CORROSION RESISTANCE REQD.: HDG
   d. MAX. SUPPORT SPACING: SEE SUPPORT SPACING TABLE 4.5 IN DOCUMENT M-2-3.
3. ALL LOADS ASSUMED TO ACT AT CENTER OF PIPE(S), U.N.O.
4. REFER TO COMPONENT MANUFACTURER'S IFUs FOR REQUIRED INSTALLATION INFO.
5. E.O.R. MUST BE NOTIFIED OF ANY DEVIATIONS FROM EXISTING/ NEW SUBSTRATE CONDITIONS SHOWN HEREIN TO VALIDATE ACCEPTANCE OF THIS HILTI DESIGN PRIOR TO INSTALLATION.

All loading and design criteria supplied by customer is assumed accurate. Only the stated Design Assumptions were considered, and must be verified by the responsible Engineer of Record (EOR). The basis of Hilti component and connection design is the published data in the current Hilti Technical Guide, including material and cross-section properties, allowable load values, factors of safety, methods of calculation, and limiting factors. The EOR must verify suitability for any specific application, and the capacity of the supportive structure to receive the shown configuration and associated reaction loads. Modification to components and/or design may alter performance and must be evaluated by the EOR.

TYPICAL DETAIL TYPE:

PIPE SUPPORT

TYPICAL DETAIL DESCRIPTION:

TRAPEZE - SINGLE

DESIGNED BY:	REVIEWED BY:
KL	AJV
DRAWN BY:	ISSUE DATE:
HAM	03 DEC 14

REVISIONS:

NO:	DESCRIPTION:	DATE:
A	ORIGINAL ISSUE	03 DEC 14

TYPICAL DETAIL NOMENCLATURE:

P-TR04-S

DRAWING NUMBER:	SHEET:
01	1/1

\\hilti.com\us\TEAMS\Installations\Projects\TYPICALS\TYPICAL LIBRARY\PIPING (P)\CAD\P-TR04-S.dwg, 12/29/2014 3:32:14 PM

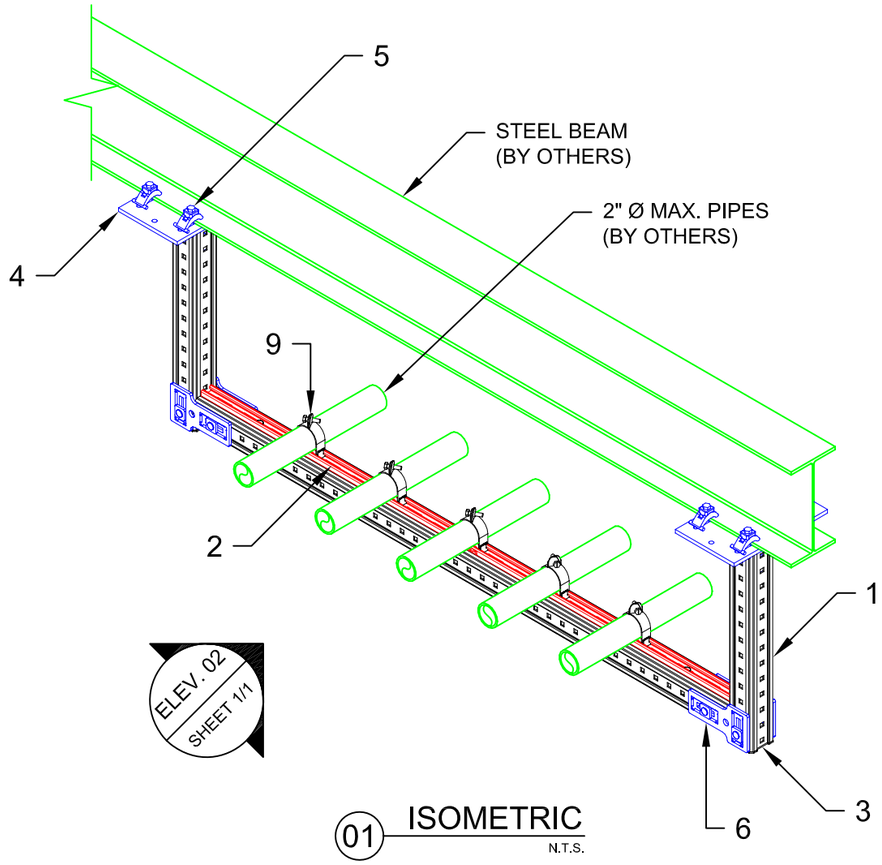

01 ISOMETRIC
N.T.S.

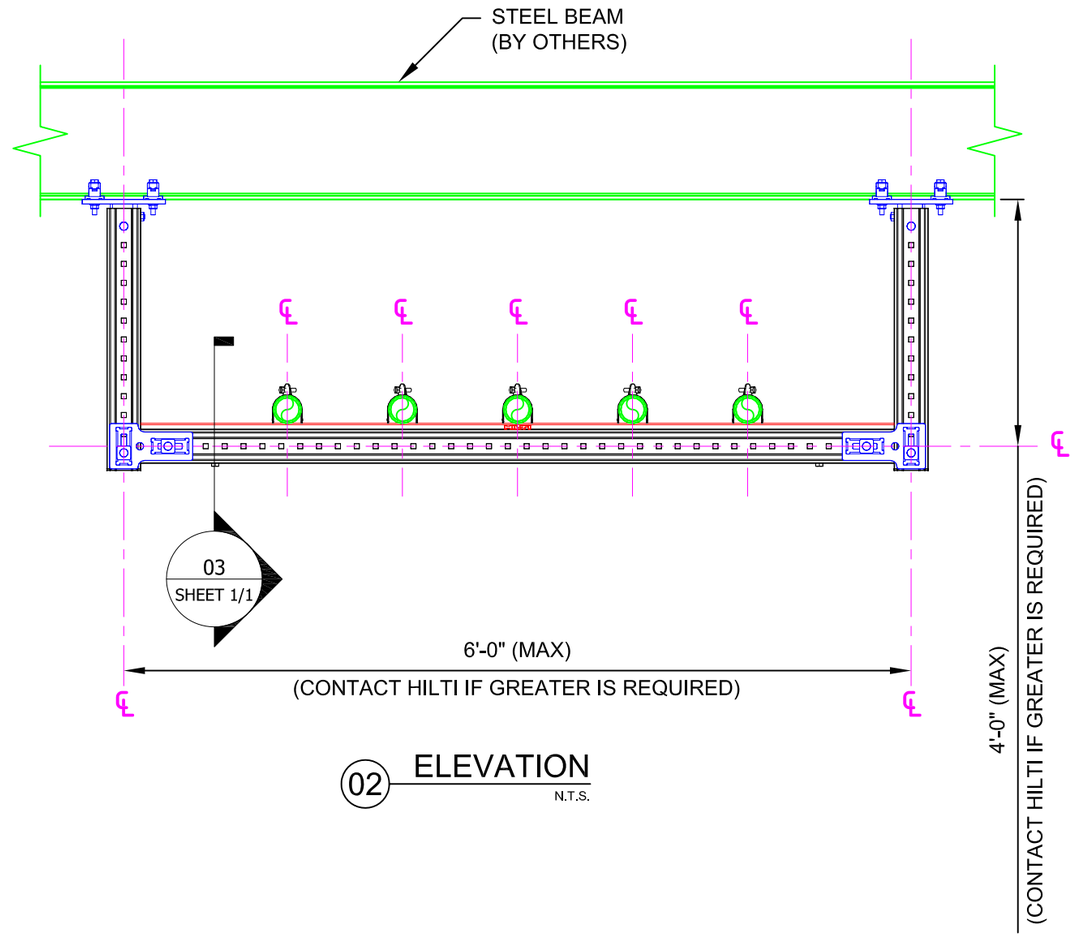

02 ELEVATION
N.T.S.

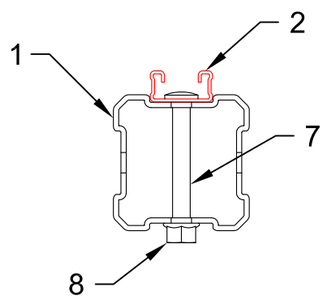

03 SECTION
N.T.S.

No.	Unit Qty	Unit	Description	Box Qty	# Boxes Needed	Item No.
1	AS REQ'D	EA	GIRDER MI-90 3M	1	AS REQ'D	304798
2	AS REQ'D	EA	STRUT HS-1316-12/PG 10'	1	AS REQ'D	407543
3	2	EA	GIRDER END CAP MIA-EC90	25	1	432077
4	2	EA	CONNECTOR MIC-S90-X STEEL (SEE TABLE)	VARIES	VARIES	VARIES
5	8	EA	BEAM CLAMP MI-SGC-M12	16	1	233859
6	2	PR	CONNECTOR MIC-T	2	0	304807
7	2	EA	ONEHAND SCREW MIA-OH90	10	1	304889
8	2	EA	MI HEX NUT M12-F-SL-WS 3/4"	100	1	382897
9	5	EA	STRUT CLAMP SC 45-RIGID (SEE TABLE)	VARIES	VARIES	VARIES

MH-R45 Strut Clamps	
Pipe Size	Item No.
1/2"	2008810
3/4"	2008811
1"	2008812
1-1/4"	2008813
1-1/2"	2008814
2"	2008815

MIC-S90-X

Beam Width Table

X	'B' Width	Item No.
A	2.9 to 6.5	304812
B	6.5 to 9.2	304813
C	9.2 to 11.8	304814

NOTE(S):

1. PRELIMINARY NOT FOR CONSTRUCTION
2. DESIGN ASSUMPTIONS:
   a. DESIGN LOADS (STATIC, U.N.O.):
      DL: 100 lbs./PIPE
   b. LATERAL LOADS NOT CONSIDERED
   c. BUILDING CODE: NOT SPECIFIED
   d. CORROSION RESISTANCE REQD.: NOT SPECIFIED
3. ALL LOADS ASSUMED TO ACT AT CENTER OF PIPE(S), U.N.O.
4. REFER TO COMPONENT MANUFACTURER'S IFUs FOR REQUIRED INSTALLATION INFO.
5. E.O.R. MUST BE NOTIFIED OF ANY DEVIATIONS FROM EXISTING/ NEW SUBSTRATE CONDITIONS SHOWN HEREIN TO VALIDATE ACCEPTANCE OF THIS HILTI DESIGN PRIOR TO INSTALLATION.

All loading and design criteria supplied by customer is assumed accurate. Only the stated Design Assumptions were considered, and must be verified by the responsible Engineer of Record (EOR). The basis of Hilti component and connection design is the published data in the current Hilti Technical Guide, including material and cross-section properties, allowable load values, factors of safety, methods of calculation, and limiting factors. The EOR must verify suitability for any specific application, and the capacity of the supportive structure to receive the shown configuration and associated reaction loads. Modification to components and/or design may alter performance and must be evaluated by the EOR.

TYPICAL DETAIL TYPE:

PIPE SUPPORT

TYPICAL DETAIL DESCRIPTION:

TRAPEZE - SINGLE
MULTI - PIPE

DESIGNED BY:	REVIEWED BY:
KL	AJV
DRAWN BY:	ISSUE DATE:
HAM	03 DEC 14

REVISIONS:

NO:	DESCRIPTION:	DATE:
A	ORIGINAL ISSUE	03 DEC 14

TYPICAL DETAIL NOMENCLATURE:

P-TR25-S

DRAWING NUMBER:	SHEET:
01	1/1

\\hilti.com\us\TEAMS\installations\Projects\TYPICALS\TYPICAL LIBRARY\PIPING (P)\CAD\P-TR25-S.dwg, 12/29/2014 12:39:32 PM