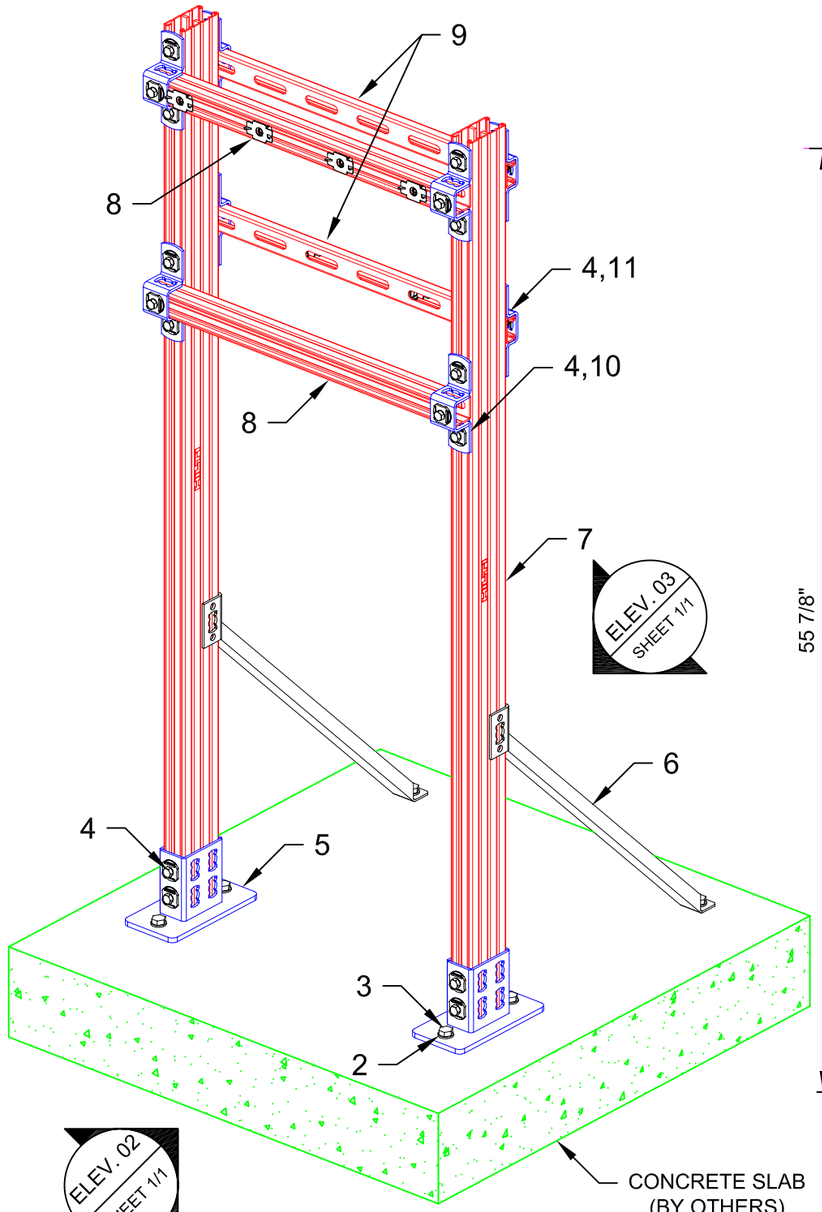

01 ISOMETRIC
N.T.S.

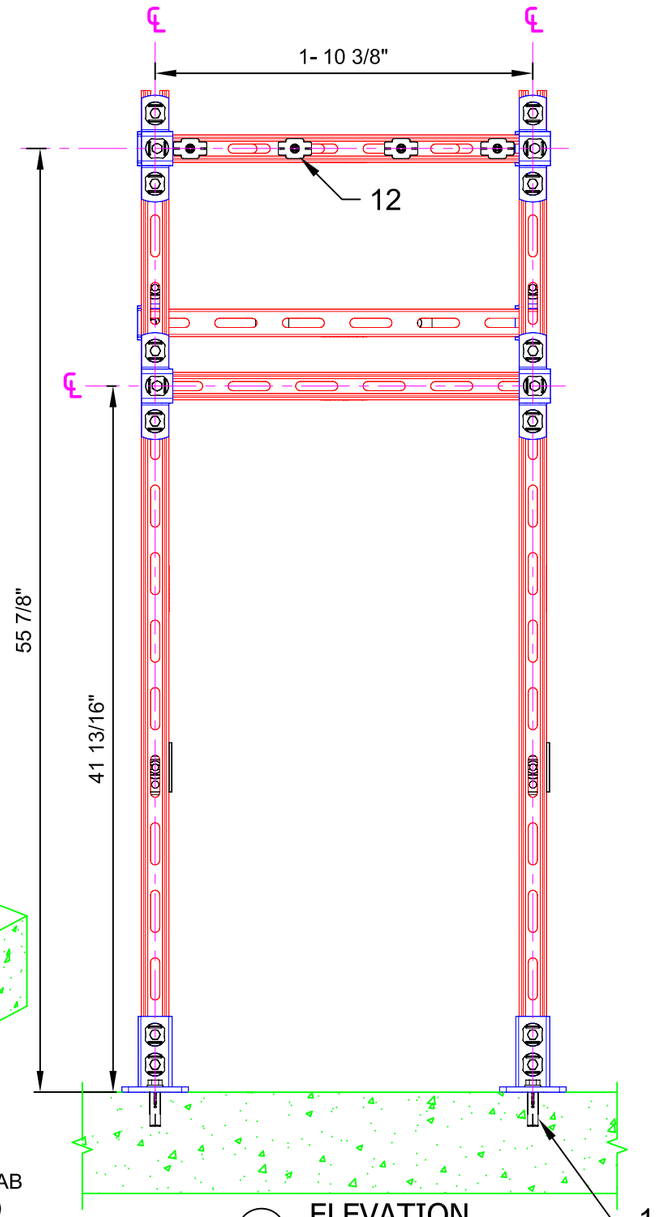

02 ELEVATION
N.T.S.

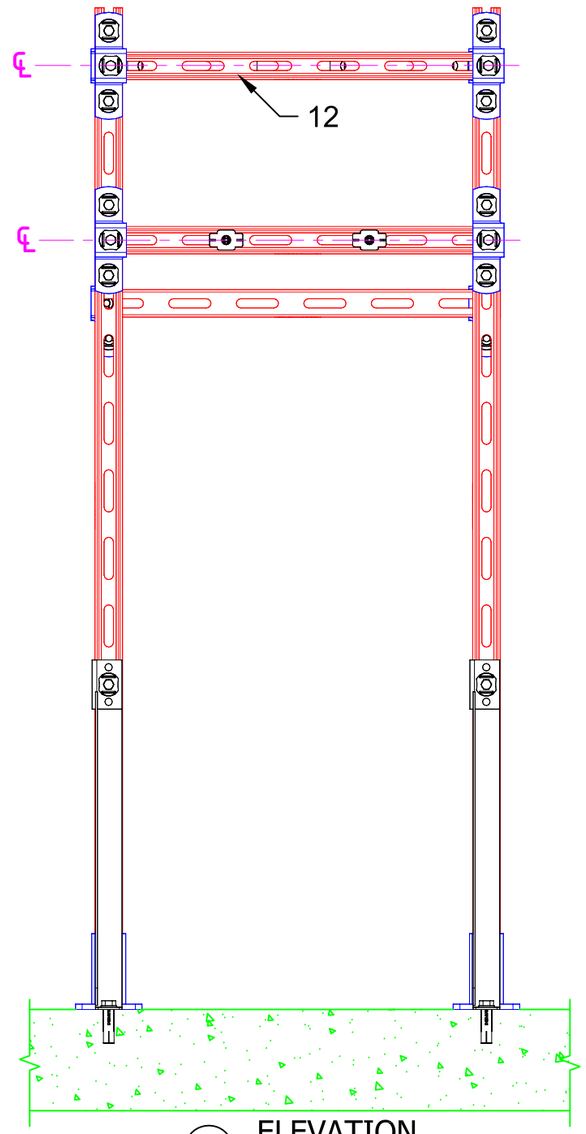

03 ELEVATION
N.T.S.

No.	Unit Qty	Unit	Description	Box Qty	# Boxes Needed	Item No.
1	6	EA	FLUSH ANCHOR HDI 1/2 SS (303)	50	1	336432
2	6	EA	WASHER 1/2" SS316	100	1	411781
3	6	EA	HEX HEAD BOLT 1/2" X 1" SS316	50	1	411790
4	34	EA	CHANNEL CONNECTOR MQN-R	25	2	304012
5	2	EA	BASE MQP-82-R	1	2	304048
6	2	EA	ANGLE BRACE MQK-SL-R	10	1	304010
7	AS REQ'D	EA	STRUT MS-158-12/SS316TI 9'-10" (3M) B2B CUT TO 59"	1	AS REQ'D	3424529
8	AS REQ'D	EA	STRUT MS-158-12/ SS316TI 9'-10" (3M) CUT TO 24"	1	AS REQ'D	3424527
9	AS REQ'D	EA	STRUT 1316 -14 SS316TI 3M (9'10") CUT TO 24"	1	AS REQ'D	3445372
10	4	EA	CLAMP MQB-41-R	10	1	304061
11	4	EA	CLAMP MQB-21	10	1	369666
12	8	EA	WING NUT MQM-F1/4"-R	25	1	304018

NOTE(S):

1. PRELIMINARY NOT FOR CONSTRUCTION
2. DESIGN ASSUMPTIONS:
   a. NO LOADS CONSIDERED - CONCEPT ONLY
   b. LATERAL LOADS NOT CONSIDERED
   c. BUILDING CODE: NOT SPECIFIED
   d. CORROSION RESISTANCE REQD.: NOT SPECIFIED
3. REFER TO COMPONENT MANUFACTURER'S IFUs FOR REQUIRED INSTALLATION INFO.
4. E.O.R. MUST BE NOTIFIED OF ANY DEVIATIONS FROM EXISTING/ NEW SUBSTRATE CONDITIONS SHOWN HEREIN TO VALIDATE ACCEPTANCE OF THIS HILTI DESIGN PRIOR TO INSTALLATION.

All loading and design criteria supplied by customer is assumed accurate. Only the stated Design Assumptions were considered, and must be verified by the responsible Engineer of Record (EOR). The basis of Hilti component and connection design is the published data in the current Hilti Technical Guide, including material and cross-section properties, allowable load values, factors of safety, methods of calculation, and limiting factors. The EOR must verify suitability for any specific application, and the capacity of the supportive structure to receive the shown configuration and associated reaction loads. Modification to components and/or design may alter performance and must be evaluated by the EOR.

TYPICAL DETAIL TYPE:

ELECTRICAL & INSTRUMENTATION APPLICATION

TYPICAL DETAIL DESCRIPTION:

BRACED PANEL STAND

DESIGNED BY:	REVIEWED BY:
KL	AJV
DRAWN BY:	ISSUE DATE:
GAB	05 DEC 14

REVISIONS:

NO:	DESCRIPTION:	DATE:
A	ORIGINAL ISSUE	05 DEC 14

TYPICAL DETAIL NOMENCLATURE:

EI-BPS51-C

DRAWING NUMBER:	SHEET:
01	1/1

\\hilti.com\US\TEAMS\installations\Projects\TYPICALS\TYPICAL LIBRARY\ELECTRICAL & INSTRUMENTATION (E&I)\CAD\EI-BPS51-C.dwg, 12/23/2014 8:50:21 AM

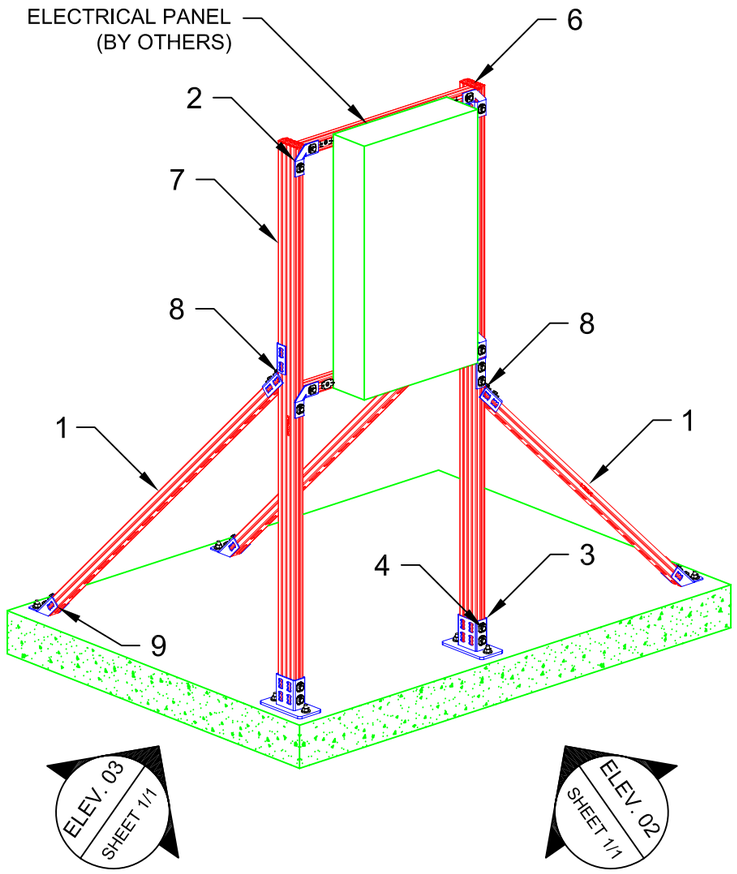

01 ISOMETRIC
N.T.S.

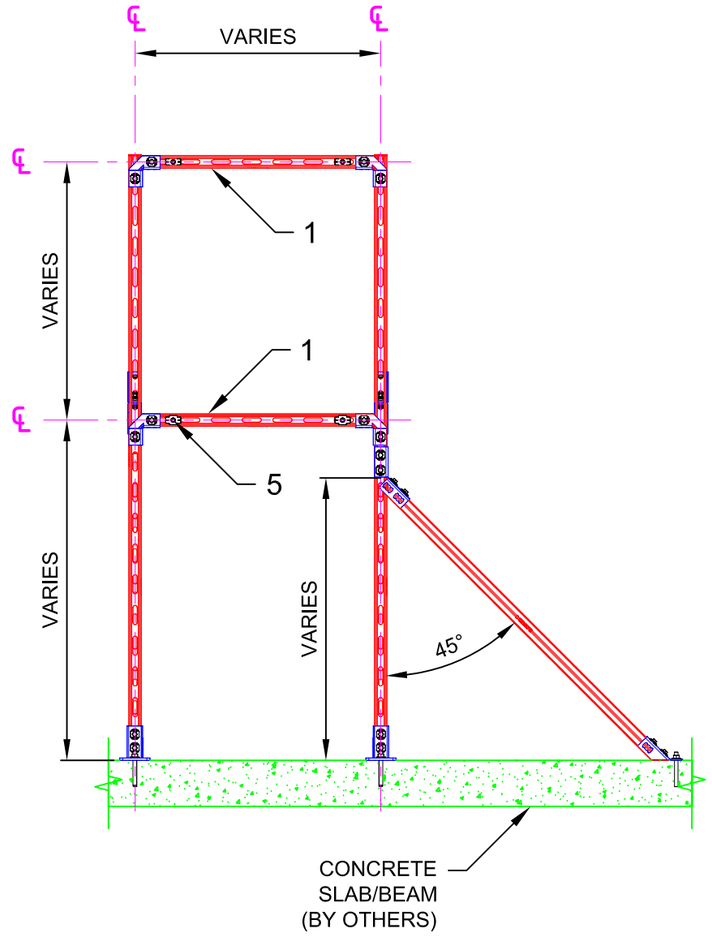

02 ELEVATION
N.T.S.

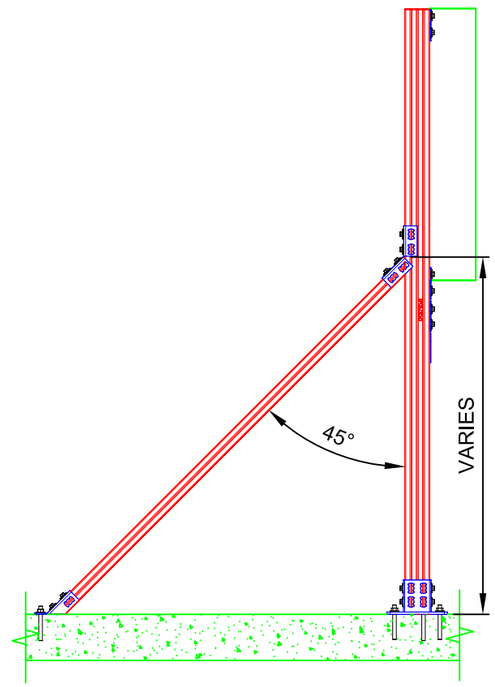

03 ELEVATION
N.T.S.

No.	Unit Qty	Unit	Description	Box Qty	# Boxes Needed	Item No.
1	AS REQ'D	EA	STRUT HS-158-12/PG 10'	1	AS REQ'D	407555
2	4	EA	4-HOLE ANGLE MQW-4	10	1	369658
3	2	EA	RAIL SUPPORT MQP-82	8	1	369652
4	26	EA	CHANNEL CONNECTOR MQN	50	1	369623
5	4	EA	WING NUT MQM-F1/2"	50	1	377883
6	4	EA	CHANNEL END CAP MEK RED	50	1	244886
7	AS REQ'D	EA	STRUT HS-158-12/PG 10' B2B	1	AS REQ'D	2007082
8	3	EA	8-HOLE ANGLE MQW-8/45	10	1	369660
9	3	EA	RAIL SUPPORT MQP-45	10	1	369649

NOTE(S):

1. PRELIMINARY NOT FOR CONSTRUCTION
2. DESIGN ASSUMPTIONS:
   a. NO LOADS CONSIDERED - CONCEPT ONLY
   b. LATERAL LOADS NOT CONSIDERED
   c. BUILDING CODE: NOT SPECIFIED
   d. CORROSION RESISTANCE REQD.: NOT SPECIFIED
3. REFER TO COMPONENT MANUFACTURER'S IFUs FOR REQUIRED INSTALLATION INFO.
4. E.O.R. MUST BE NOTIFIED OF ANY DEVIATIONS FROM EXISTING/ NEW SUBSTRATE CONDITIONS SHOWN HEREIN TO VALIDATE ACCEPTANCE OF THIS HILTI DESIGN PRIOR TO INSTALLATION.

All loading and design criteria supplied by customer is assumed accurate. Only the stated Design Assumptions were considered, and must be verified by the responsible Engineer of Record (EOR). The basis of Hilti component and connection design is the published data in the current Hilti Technical Guide, including material and cross-section properties, allowable load values, factors of safety, methods of calculation, and limiting factors. The EOR must verify suitability for any specific application, and the capacity of the supportive structure to receive the shown configuration and associated reaction loads. Modification to components and/or design may alter performance and must be evaluated by the EOR.

TYPICAL DETAIL TYPE:

ELECTRICAL & INSTRUMENTATION APPLICATION

TYPICAL DETAIL DESCRIPTION:

BRACED PANEL STAND

DESIGNED BY:	REVIEWED BY:
KL	AJV
DRAWN BY:	ISSUE DATE:
GAB	05 DEC 14

REVISIONS:

NO:	DESCRIPTION:	DATE:
A	ORIGINAL ISSUE	05 DEC 14

TYPICAL DETAIL NOMENCLATURE:

EI-BPS52-C

DRAWING NUMBER:	SHEET:
01	1/1

\\hilti.com\US\TEAMS\installations\Projects\TYPICALS\TYPICAL LIBRARY\ELECTRICAL & INSTRUMENTATION (E&I)\CAD\EI-BPS52-C.dwg, 12/23/2014 8:52:45 AM

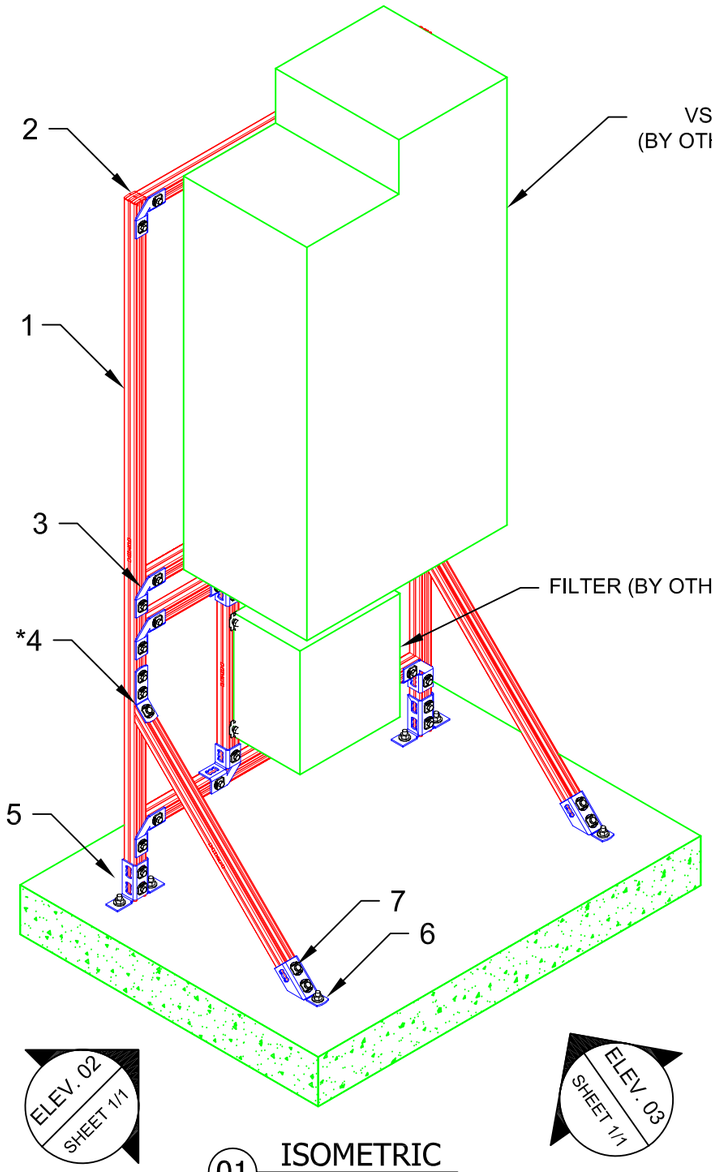

01 ISOMETRIC
N.T.S.

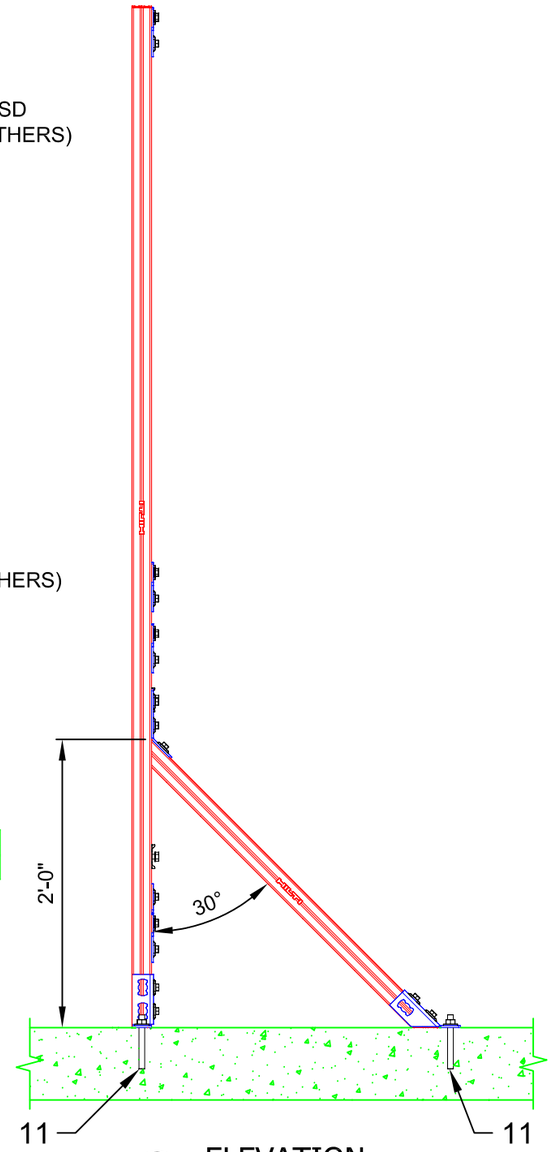

02 ELEVATION
N.T.S.

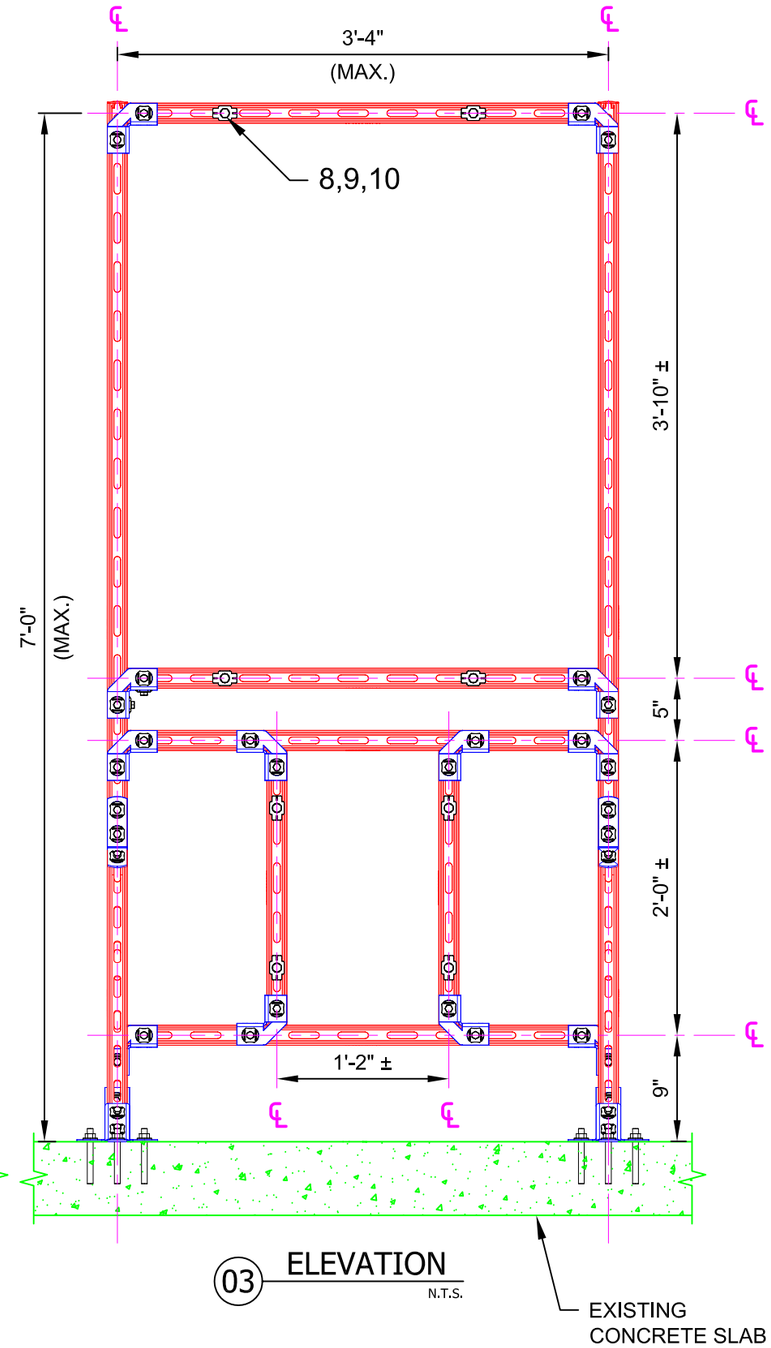

03 ELEVATION
N.T.S.

No.	Unit Qty	Unit	Description	Box Qty	# Boxes Needed	Item No.
1	AS REQ'D	EA	STRUT HS-158-12/PG 10'	1	AS REQ'D	407555
2	4	EA	CHANNEL END CAP MEK RED	50	1	244886
3	12	EA	4-HOLE ANGLE MQW-4	10	2	369658
4	2	EA	3-HOLE ANGLE MQW-3/45	20	1	369657
5	2	EA	RAIL SUPPORT MQV-2/2 D-14	10	1	369639
6	2	EA	RAIL SUPPORT MQP-45	10	1	369649
7	38	EA	CHANNEL CONNECTOR MQN	50	1	369623
8	8	EA	WING NUT MQM-F3/8"	50	1	377882
9	8	EA	WASHER 3/8"	200	1	411757
10	8	EA	HEX HEAD BOLT 3/8" x 1-1/4"	100	1	411764
11	6	EA	USE 1/2" DIA. KB3 OR KB-TZ AS APPROPRIATE	VARIES	VARIES	VARIES

NOTE(S):

1. PRELIMINARY NOT FOR CONSTRUCTION
2. DESIGN ASSUMPTIONS:
   a. DESIGN LOADS (STATIC, U.N.O.):
      DL: 360 LBS (VSD)
      51 LBS (FILTER)
   b. LATERAL LOADS NOT CONSIDERED
   c. CORROSION RESISTANCE REQD.:EG
2. REFER TO COMPONENT MANUFACTURER'S IFUs FOR REQUIRED INSTALLATION INFO.
3. E.O.R. MUST BE NOTIFIED OF ANY DEVIATIONS FROM EXISTING SUBSTRATE CONDITIONS SHOWN HEREIN TO VALIDATE ACCEPTANCE OF THIS HILTI DESIGN PRIOR TO INSTALLATION.

*4. FIELD BEND TO ACHIEVE SPECIFIED ANGLE.

All loading and design criteria supplied by customer is assumed accurate. Only the stated Design Assumptions were considered, and must be verified by the responsible Engineer of Record (EOR). The basis of Hilti component and connection design is the published data in the current Hilti Technical Guide, including material and cross-section properties, allowable load values, factors of safety, methods of calculation, and limiting factors. The EOR must verify suitability for any specific application, and the capacity of the supportive structure to receive the shown configuration and associated reaction loads. Modification to components and/or design may alter performance and must be evaluated by the EOR.

TYPICAL DETAIL TYPE:

ELECTRICAL & INSTRUMENTATION APPLICATION

TYPICAL DETAIL DESCRIPTION:

BRACED PANEL STAND

DESIGNED BY:	REVIEWED BY:
KL	AJV
DRAWN BY:	ISSUE DATE:
GAB	05 DEC 14

REVISIONS:

NO:	DESCRIPTION:	DATE:
A	ORIGINAL ISSUE	05 DEC 14

TYPICAL DETAIL NOMENCLATURE:

EI-BPS53-C

DRAWING NUMBER:	SHEET:
01	1/1

\\hilti.com\US\TEAMS\installations\Projects\TYPICALS\TYPICAL LIBRARY\ELECTRICAL & INSTRUMENTATION (E&I)\CAD\EI-BPS53-C.dwg, 12/23/2014 8:55:41 AM

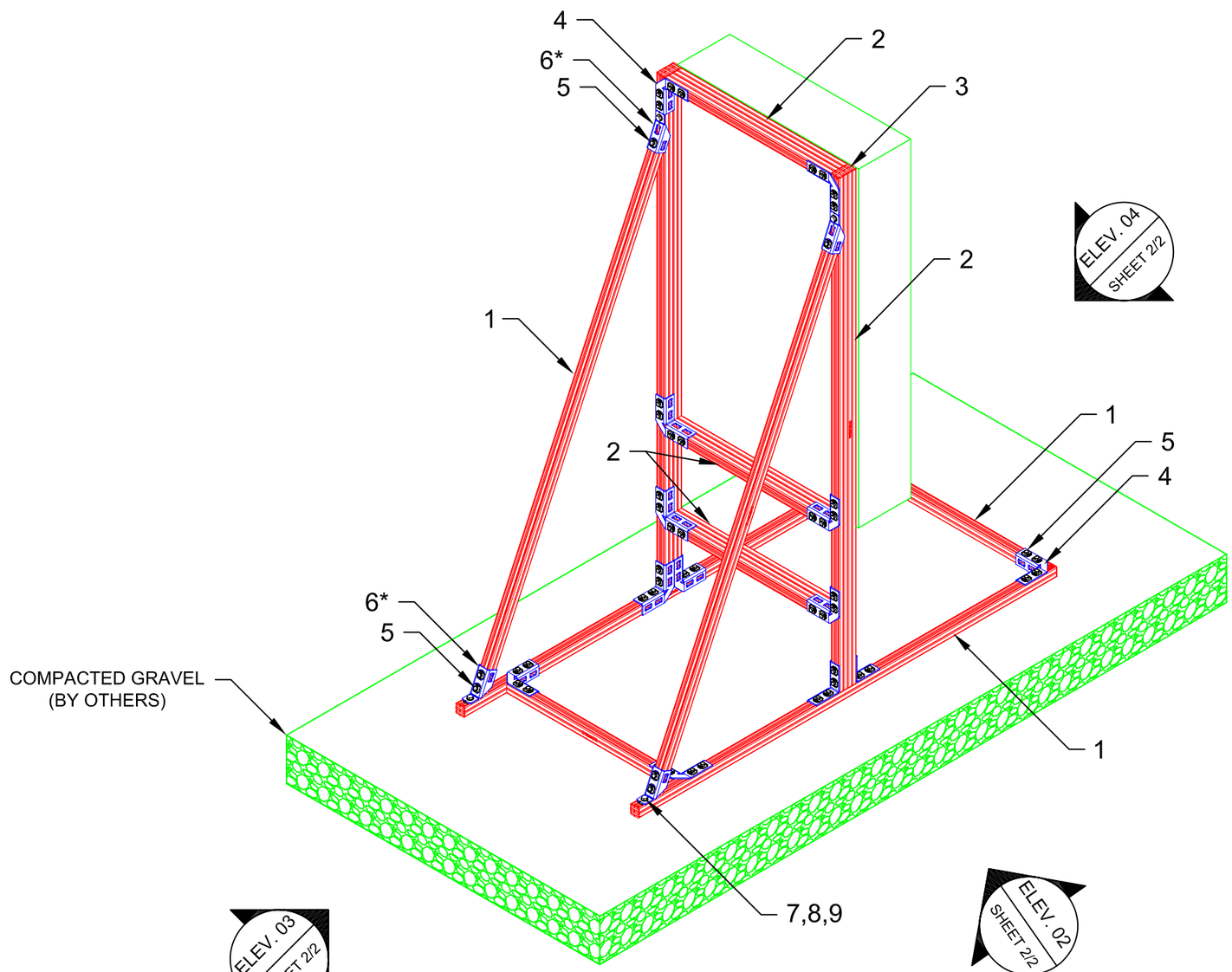

01 ISOMETRIC
N.T.S.

No.	Unit Qty	Unit	Description	Box Qty	# Boxes Needed	Item No.
1	AS REQ'D	EA	STRUT HS-158-12/HDG 10'	1	AS REQ'D	407570
2	AS REQ'D	EA	STRUT HS-158-12/HDG 10' B2B	1	AS REQ'D	2007087
3	16	EA	CHANNEL END CAP MEK RED	50	1	244886
4	14	EA	8-HOLE ANGLE MQW-8/90-F	10	2	304175
5	56	EA	CHANNEL CONNECTOR MQN-HDG PLUS	50	2	387779
6	4	EA	RAIL SUPPORT MQP-45-F	10	1	304164
7	4	EA	WING NUT MQM-F1/2"-F	25	1	304137
8	4	EA	HEX HEAD BOLT 1/2" x 1 1/4" - HDG	VARIES	VARIES	SPECIAL
9	4	EA	WASHER 1/2" - HDG	VARIES	VARIES	SPECIAL
10	4	EA	WING NUT MQM-F3/8"-F	25	1	304136
11	4	EA	HEX HEAD BOLT 3/8" x 1" - HDG	VARIES	VARIES	SPECIAL
12	4	EA	WASHER 3/8" - HDG	VARIES	VARIES	SPECIAL

NOTE(S):
1. PRELIMINARY NOT FOR CONSTRUCTION
2. DESIGN ASSUMPTIONS:
   a. DESIGN LOADS (STATIC, U.N.O.):
      DL: 250 lbs.
   b. LATERAL LOADS NOT CONSIDERED
   c. CORROSION RESISTANCE REQD.: HDG
2. REFER TO COMPONENT MANUFACTURER'S IFUs FOR REQUIRED INSTALLATION INFO.
3. E.O.R. MUST BE NOTIFIED OF ANY DEVIATIONS FROM EXISTING/ NEW SUBSTRATE CONDITIONS SHOWN HEREIN TO VALIDATE ACCEPTANCE OF THIS HILTI DESIGN PRIOR TO INSTALLATION.
4. * FIELD BEND ONCE TO ACHIEVE REQUIRED ANGLE.

All loading and design criteria supplied by customer is assumed accurate. Only the stated Design Assumptions were considered, and must be verified by the responsible Engineer of Record (EOR). The basis of Hilti component and connection design is the published data in the current Hilti Technical Guide, including material and cross-section properties, allowable load values, factors of safety, methods of calculation, and limiting factors. The EOR must verify suitability for any specific application, and the capacity of the supportive structure to receive the shown configuration and associated reaction loads. Modification to components and/or design may alter performance and must be evaluated by the EOR.

TYPICAL DETAIL TYPE:

ELECTRICAL & INSTRUMENTATION APPLICATION

TYPICAL DETAIL DESCRIPTION:

BRACED PANEL STAND

DESIGNED BY:	REVIEWED BY:
KL	AJV
DRAWN BY:	ISSUE DATE:
GAB	05 DEC 14

REVISIONS:

NO:	DESCRIPTION:	DATE:
A	ORIGINAL ISSUE	05 DEC 14

TYPICAL DETAIL NOMENCLATURE:

EI-BPS54-NA

DRAWING NUMBER:	SHEET:
01	1/2

\\hilti.com\US\TEAMS\installations\Projects\TYPICALS\TYPICAL LIBRARY\ELECTRICAL & INSTRUMENTATION (E&I)\CAD\EI-BPS54-NA.dwg, 12/23/2014 8:58:35 AM

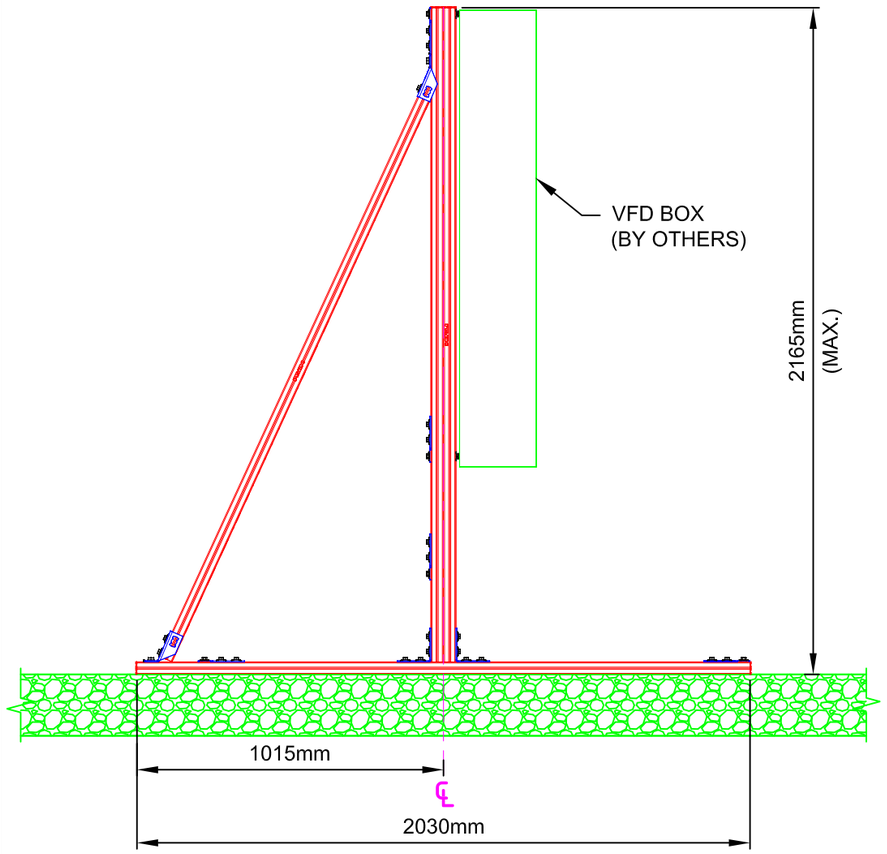

02 ELEVATION
N.T.S.

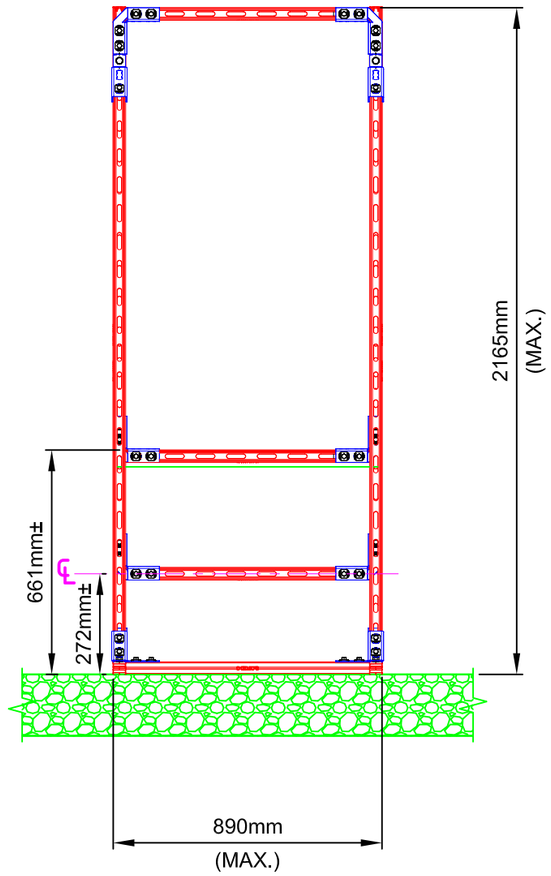

03 ELEVATION
N.T.S.

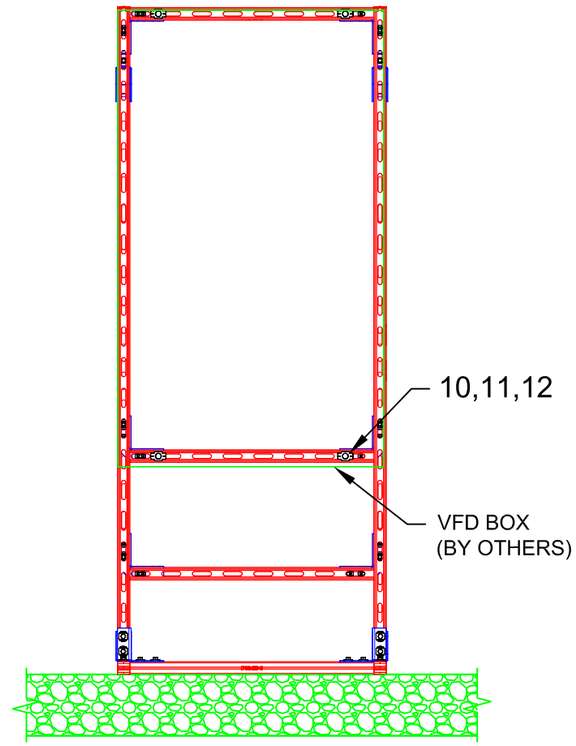

04 ELEVATION
N.T.S.

NOTE(S):
1. REFER TO SHEET 1 FOR APPLICABLE NOTE(S).

All loading and design criteria supplied by customer is assumed accurate. Only the stated Design Assumptions were considered, and must be verified by the responsible Engineer of Record (EOR). The basis of Hilti component and connection design is the published data in the current Hilti Technical Guide, including material and cross-section properties, allowable load values, factors of safety, methods of calculation, and limiting factors. The EOR must verify suitability for any specific application, and the capacity of the supportive structure to receive the shown configuration and associated reaction loads. Modification to components and/or design may alter performance and must be evaluated by the EOR.

TYPICAL DETAIL TYPE:

ELECTRICAL & INSTRUMENTATION APPLICATION

TYPICAL DETAIL DESCRIPTION:

BRACED PANEL STAND

DESIGNED BY:	REVIEWED BY:
KL	AJV
DRAWN BY:	ISSUE DATE:
GAB	05 DEC 14

REVISIONS:

NO:	DESCRIPTION:	DATE:
A	ORIGINAL ISSUE	05 DEC 14

TYPICAL DETAIL NOMENCLATURE:

EI-BPS54-NA

DRAWING NUMBER:	SHEET:
01	2/2

\\hilti.com\US\TEAMS\installations\Projects\TYPICALS\TYPICAL LIBRARY\ELECTRICAL & INSTRUMENTATION (E&I)\CAD\EI-BPS54-NA.dwg, 12/23/2014 8:59:14 AM

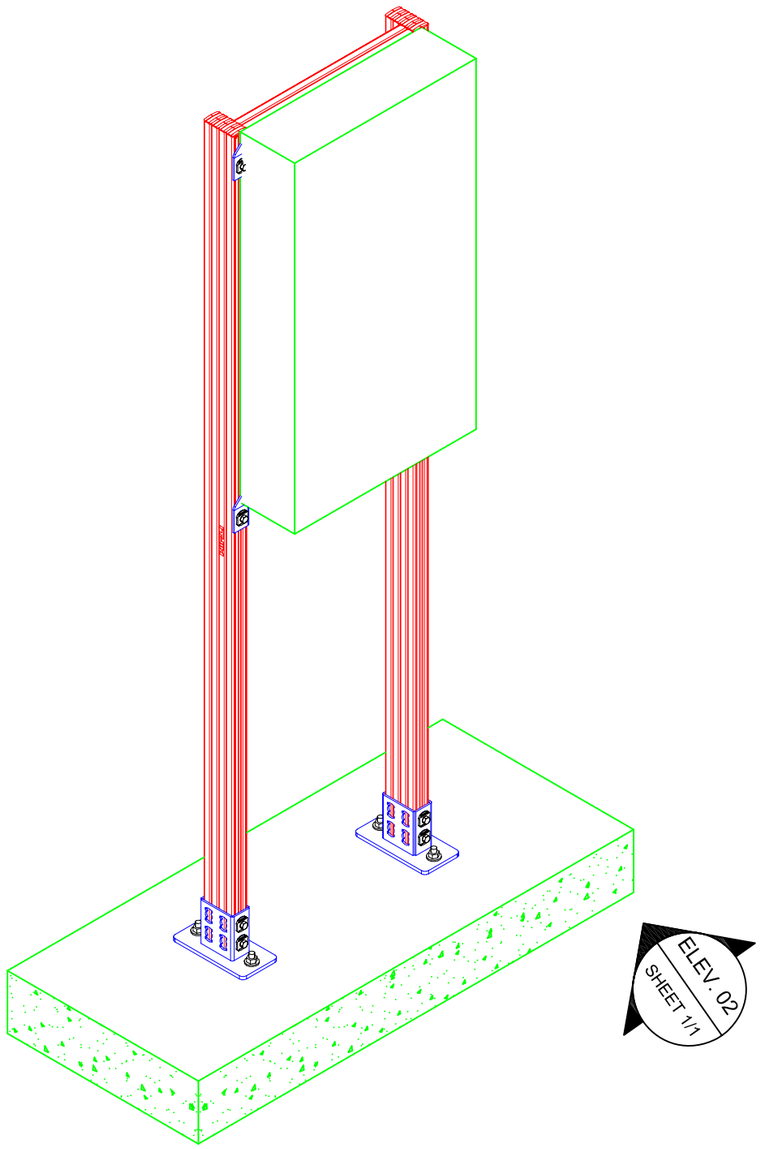

01 ISOMETRIC
N.T.S.

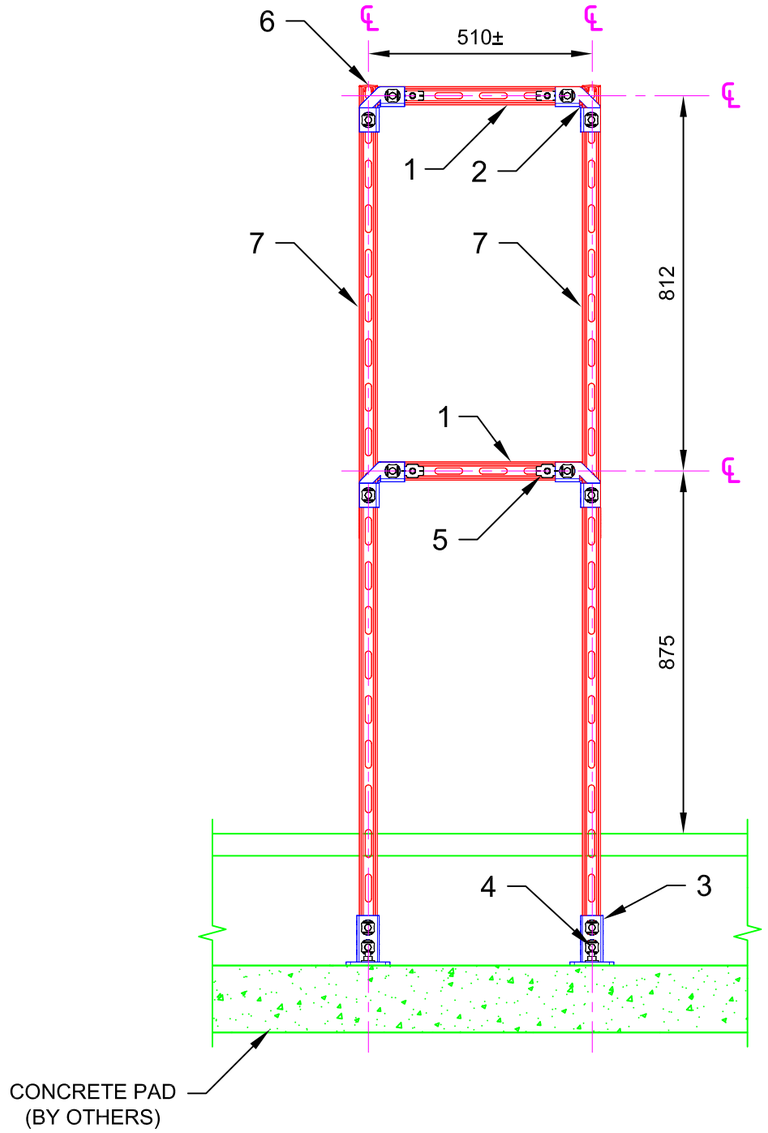

02 ELEVATION
N.T.S.

No.	Unit Qty	Unit	Description	Box Qty	# Boxes Needed	Item No.
1	AS REQ'D	EA	STRUT HS-158-12/PG 10'	1	AS REQ'D	407555
2	4	EA	4-HOLE ANGLE MQW-4	10	1	369658
3	2	EA	RAIL SUPPORT MQP-82	8	1	369652
4	16	EA	CHANNEL CONNECTOR MQN	50	1	369623
5	4	EA	WING NUT MQM-F1/2"	50	1	377883
6	4	EA	CHANNEL END CAP MEK RED	50	1	244886
7	AS REQ'D	EA	STRUT HS-158-12/PG 10' B2B	1	AS REQ'D	2007082

NOTE(S):
1. PRELIMINARY NOT FOR CONSTRUCTION
2. DESIGN ASSUMPTIONS:
   a. NO LOADS CONSIDERED - CONCEPT ONLY
   b. LATERAL LOADS NOT CONSIDERED
   c. BUILDING CODE: NBC
   d. CORROSION RESISTANCE REQD.: EG
2. REFER TO COMPONENT MANUFACTURER'S IFUs FOR REQUIRED INSTALLATION INFO.
3. E.O.R. MUST BE NOTIFIED OF ANY DEVIATIONS FROM EXISTING/ NEW SUBSTRATE CONDITIONS SHOWN HEREIN TO VALIDATE ACCEPTANCE OF THIS HILTI DESIGN PRIOR TO INSTALLATION.

All loading and design criteria supplied by customer is assumed accurate. Only the stated Design Assumptions were considered, and must be verified by the responsible Engineer of Record (EOR). The basis of Hilti component and connection design is the published data in the current Hilti Technical Guide, including material and cross-section properties, allowable load values, factors of safety, methods of calculation, and limiting factors. The EOR must verify suitability for any specific application, and the capacity of the supportive structure to receive the shown configuration and associated reaction loads. Modification to components and/or design may alter performance and must be evaluated by the EOR.

TYPICAL DETAIL TYPE:

ELECTRICAL & INSTRUMENTATION APPLICATION

TYPICAL DETAIL DESCRIPTION:

PANEL STAND

DESIGNED BY:	REVIEWED BY:
KL	AJV
DRAWN BY:	ISSUE DATE:
GAB	04 DEC 14

REVISIONS:

NO:	DESCRIPTION:	DATE:
A	ORIGINAL ISSUE	04 DEC 14

TYPICAL DETAIL NOMENCLATURE:

EI-PS51-C

DRAWING NUMBER:	SHEET:
01	1/1

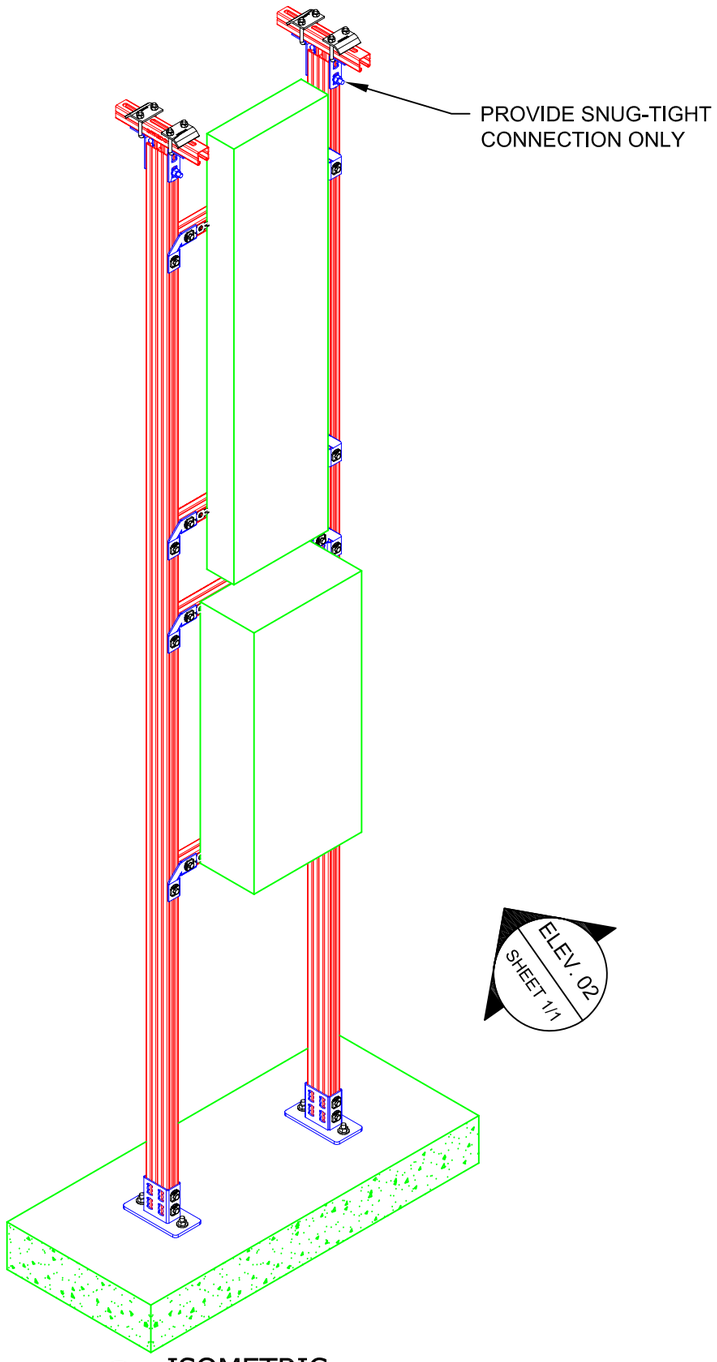

01 ISOMETRIC
N.T.S.

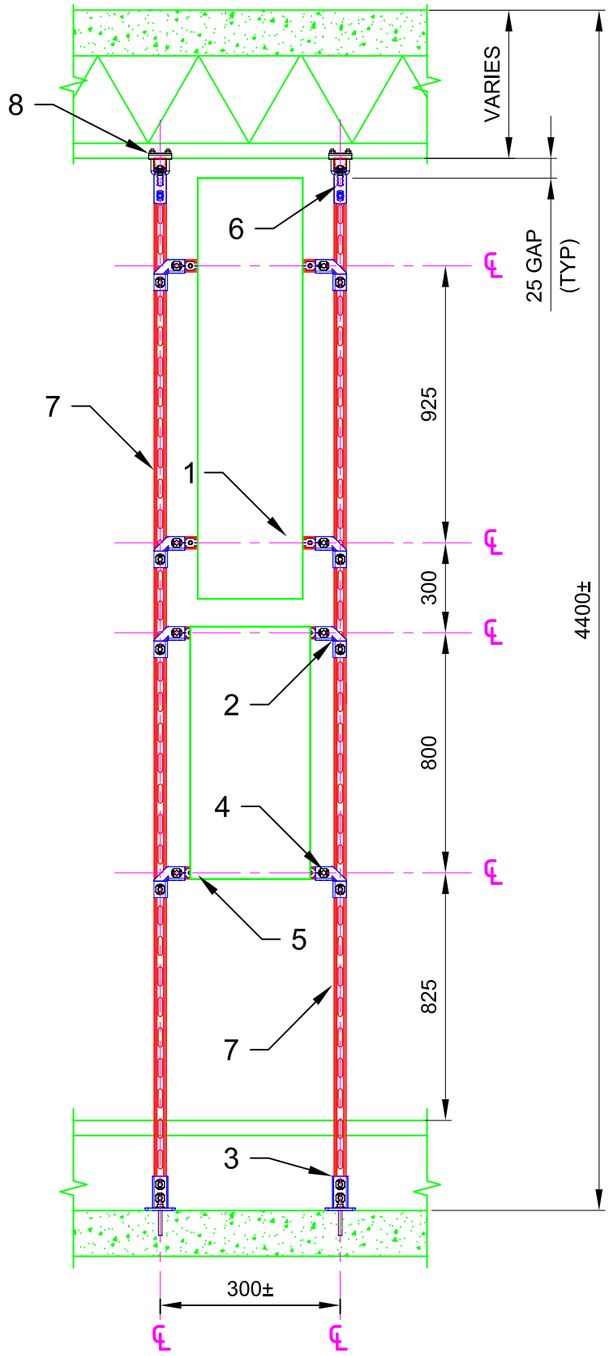

02 ELEVATION
N.T.S.

No.	Unit Qty	Unit	Description	Box Qty	# Boxes Needed	Item No.
1	AS REQ'D	EA	STRUT HS-158-12/PG 10'	1	AS REQ'D	407555
2	8	EA	4-HOLE ANGLE MQW-4	10	1	369658
3	2	EA	RAIL SUPPORT MQP-82	8	1	369652
4	24	EA	CHANNEL CONNECTOR MQN	50	1	369623
5	8	EA	WING NUT MQM-F1/2"	50	1	377883
6	4	EA	3-HOLE ANGLE MQW-3	20	1	369656
7	AS REQ'D	EA	STRUT HS-158-12/PG 20' B2B	1	AS REQ'D	2007083
8	4	EA	STRUT BEAM CLAMP SBC (25/BOX)	25	1	258316

NOTE(S):
1. PRELIMINARY NOT FOR CONSTRUCTION
2. DESIGN ASSUMPTIONS:
   a. NO LOADS CONSIDERED - CONCEPT ONLY
   b. LATERAL LOADS NOT CONSIDERED
   c. BUILDING CODE: NBC
   d. CORROSION RESISTANCE REQD.: EG
2. REFER TO COMPONENT MANUFACTURER'S IFUs FOR REQUIRED INSTALLATION INFO.
3. E.O.R. MUST BE NOTIFIED OF ANY DEVIATIONS FROM EXISTING/ NEW SUBSTRATE CONDITIONS SHOWN HEREIN TO VALIDATE ACCEPTANCE OF THIS HILTI DESIGN PRIOR TO INSTALLATION.

All loading and design criteria supplied by customer is assumed accurate. Only the stated Design Assumptions were considered, and must be verified by the responsible Engineer of Record (EOR). The basis of Hilti component and connection design is the published data in the current Hilti Technical Guide, including material and cross-section properties, allowable load values, factors of safety, methods of calculation, and limiting factors. The EOR must verify suitability for any specific application, and the capacity of the supportive structure to receive the shown configuration and associated reaction loads. Modification to components and/or design may alter performance and must be evaluated by the EOR.

TYPICAL DETAIL TYPE:

ELECTRICAL & INSTRUMENTATION APPLICATION

TYPICAL DETAIL DESCRIPTION:

PANEL STAND - FIXED

DESIGNED BY:	REVIEWED BY:
KL	AJV
DRAWN BY:	ISSUE DATE:
GAB	04 DEC 14

REVISIONS:

NO:	DESCRIPTION:	DATE:
A	ORIGINAL ISSUE	04 DEC 14

TYPICAL DETAIL NOMENCLATURE:

EI-PS53-C

DRAWING NUMBER:	SHEET:
01	1/1

\\hilti.com\US\TEAMS\installations\Projects\TYPICALS\TYPICAL LIBRARY\ELECTRICAL & INSTRUMENTATION (E&I)\CAD\EI-PS53-C.dwg, 12/23/2014 8:22:57 AM

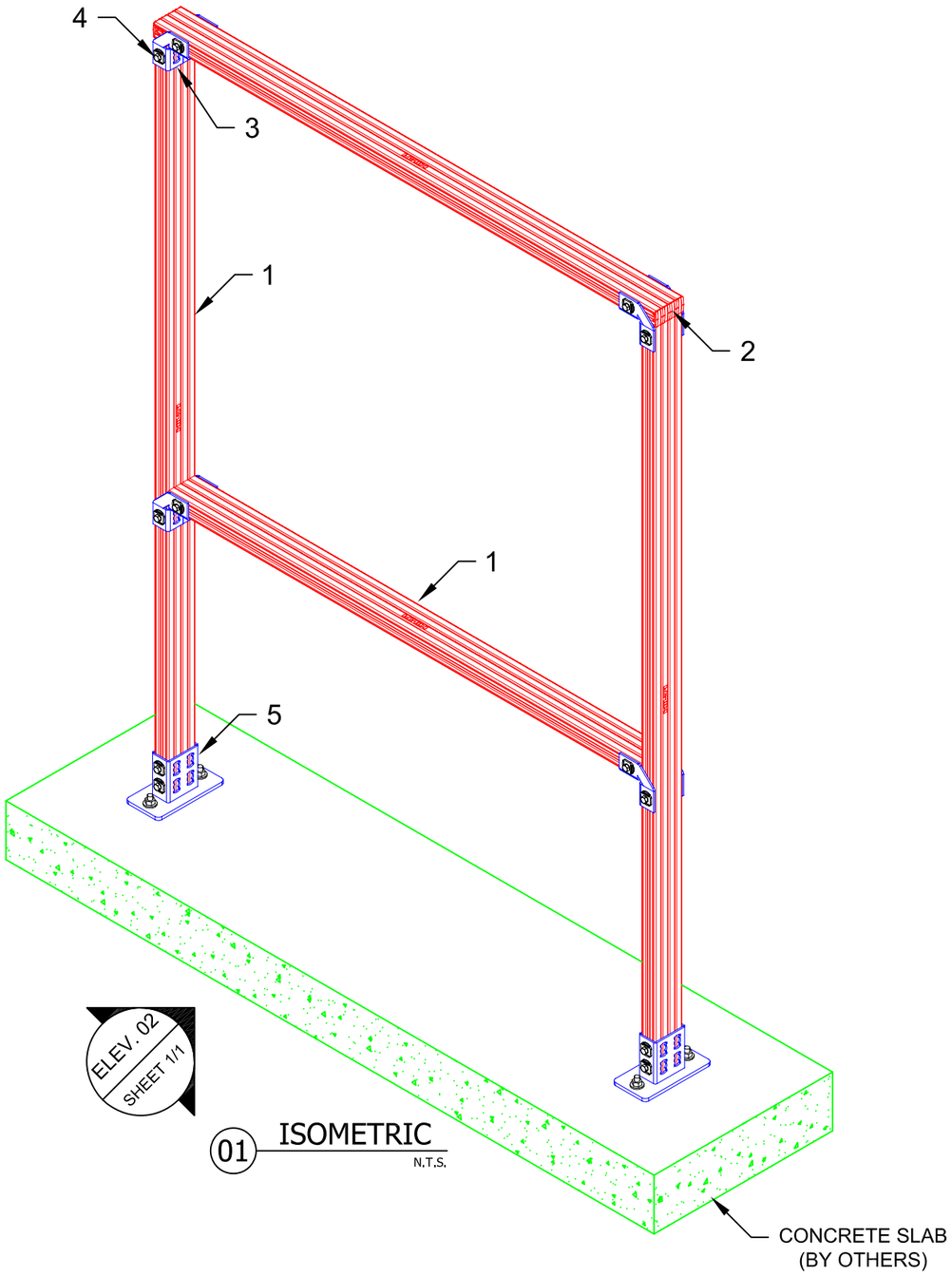

ELEV. 02
SHEET 1/1

01 ISOMETRIC
N.T.S.

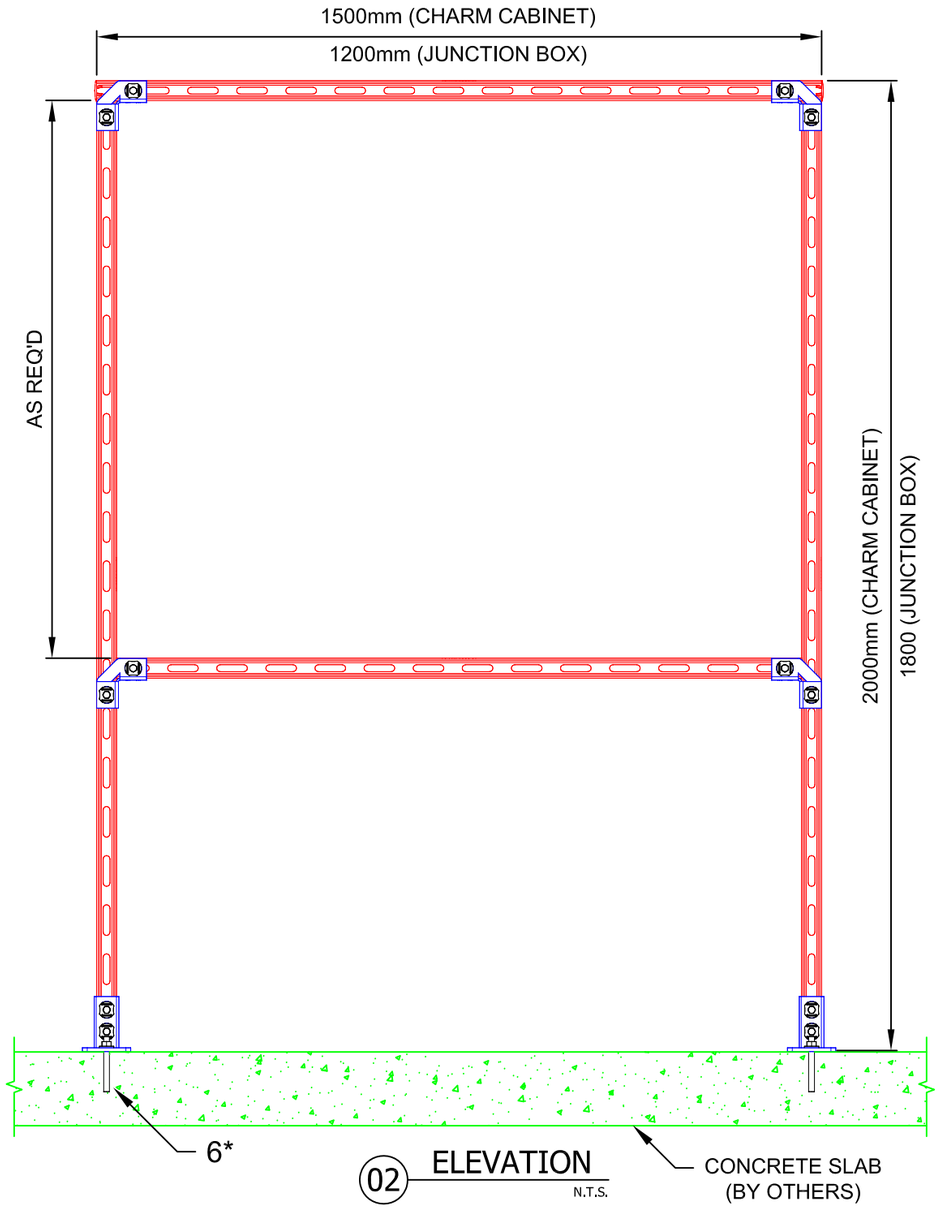

02 ELEVATION
N.T.S.

*ATTACHMENT TO SURFACE VARIES. ATTACHMENT FOR CONCRETE BASE SHOWN.

No.	Unit Qty	Unit	Description	Box Qty	# Boxes Needed	Item No.
1	AS REQ'D	EA	STRUT HS-158-12/PG 10' B2B	1	AS REQ'D	2007082
2	8	EA	CHANNEL END CAP MEK RED	50	1	244886
3	8	EA	4-HOLE ANGLE MQW-4	10	1	369658
4	24	EA	CHANNEL CONNECTOR MQN	50	1	369623
5	2	EA	RAIL SUPPORT MQP-82	8	1	369652
6	AS REQ'D	EA	USE KB3 OR KB-TZ AS APPROPRIATE	VARIES	VARIES	VARIES

NOTE(S):
1. PRELIMINARY NOT FOR CONSTRUCTION
2. DESIGN ASSUMPTIONS:
   a. NO LOADS CONSIDERED - CONCEPT ONLY
   b. LATERAL LOADS NOT CONSIDERED
   c. BUILDING CODE: NBC
   d. CORROSION RESISTANCE REQD.: EG
   e. MAX. SUPPORT SPACING = T.B.D.
2. REFER TO COMPONENT MANUFACTURER'S IFUs FOR REQUIRED INSTALLATION INFO.

All loading and design criteria supplied by customer is assumed accurate. Only the stated Design Assumptions were considered, and must be verified by the responsible Engineer of Record (EOR). The basis of Hilti component and connection design is the published data in the current Hilti Technical Guide, including material and cross-section properties, allowable load values, factors of safety, methods of calculation, and limiting factors. The EOR must verify suitability for any specific application, and the capacity of the supportive structure to receive the shown configuration and associated reaction loads. Modification to components and/or design may alter performance and must be evaluated by the EOR.

TYPICAL DETAIL TYPE:

ELECTRICAL & INSTRUMENTATION APPLICATION

TYPICAL DETAIL DESCRIPTION:

PANEL STAND

DESIGNED BY:	REVIEWED BY:
KL	AJV
DRAWN BY:	ISSUE DATE:
GAB	04 DEC 14

REVISIONS:

NO:	DESCRIPTION:	DATE:
A	ORIGINAL ISSUE	04 DEC 14

TYPICAL DETAIL NOMENCLATURE:

EI-PS55-C

DRAWING NUMBER:	SHEET:
01	1/1

\\hilti.com\US\TEAMS\installations\Projects\TYPICALS\TYPICAL LIBRARY\ELECTRICAL & INSTRUMENTATION (E&I)\CAD\EI-PS55-C.dwg, 12/23/2014 8:25:09 AM

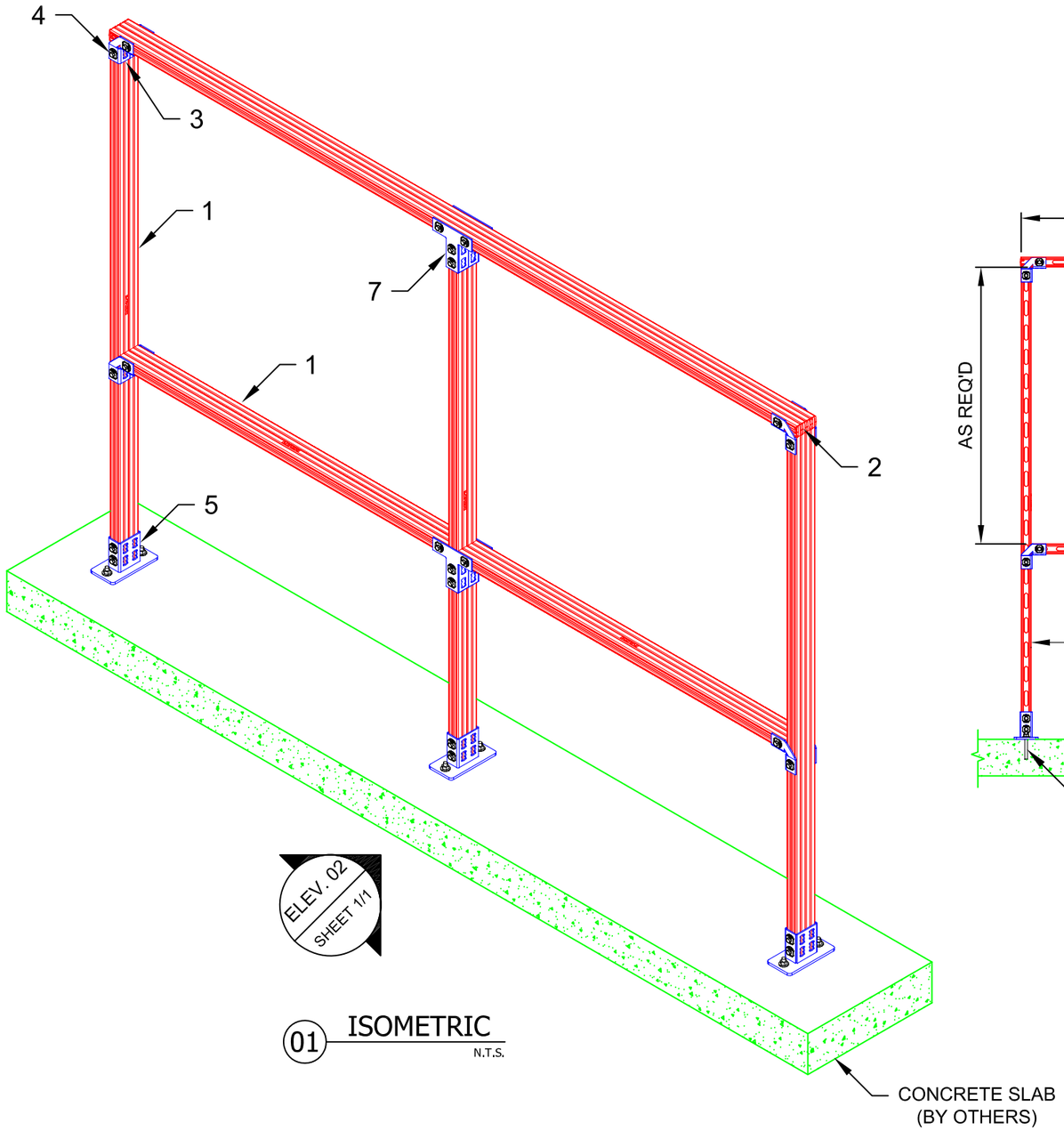

01 ISOMETRIC
N.T.S.

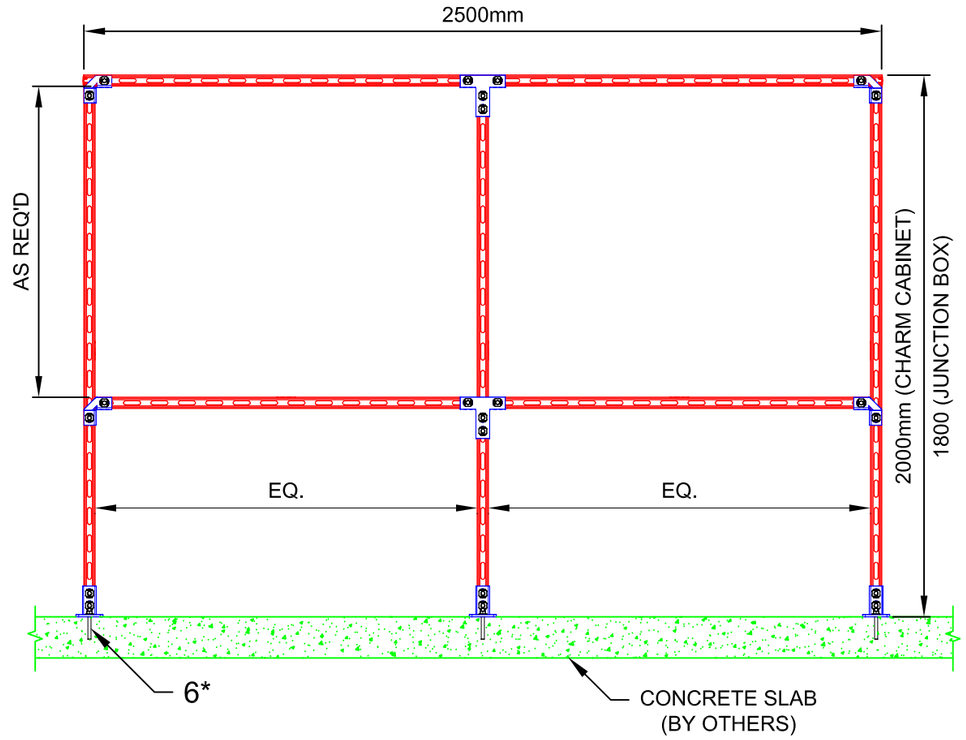

02 ELEVATION
N.T.S.

*ATTACHMENT TO SURFACE VARIES. ATTACHMENT FOR CONCRETE BASE SHOWN.

No.	Unit Qty	Unit	Description	Box Qty	# Boxes Needed	Item No.
1	AS REQ'D	EA	STRUT HS-158-12/PG 10' B2B	1	AS REQ'D	2007082
2	8	EA	CHANNEL END CAP MEK RED	50	1	244886
3	8	EA	4-HOLE ANGLE MQW-4	10	1	369658
4	44	EA	CHANNEL CONNECTOR MQN	50	1	369623
5	3	EA	RAIL SUPPORT MQP-82	8	1	369652
6	AS REQ'D	EA	USE KB3 OR KB-TZ AS APPROPRIATE	VARIES	VARIES	VARIES
7	4	EA	CHANNEL TIE MQV-3/2 D	10	1	369640

NOTE(S):
1. PRELIMINARY NOT FOR CONSTRUCTION
2. DESIGN ASSUMPTIONS:
   a. NO LOADS CONSIDERED - CONCEPT ONLY
   b. LATERAL LOADS NOT CONSIDERED
   c. BUILDING CODE: NBC
   d. CORROSION RESISTANCE REQD.: EG
   e. MAX. SUPPORT SPACING = T.B.D.
2. REFER TO COMPONENT MANUFACTURER'S IFUs FOR REQUIRED INSTALLATION INFO.

All loading and design criteria supplied by customer is assumed accurate. Only the stated Design Assumptions were considered, and must be verified by the responsible Engineer of Record (EOR). The basis of Hilti component and connection design is the published data in the current Hilti Technical Guide, including material and cross-section properties, allowable load values, factors of safety, methods of calculation, and limiting factors. The EOR must verify suitability for any specific application, and the capacity of the supportive structure to receive the shown configuration and associated reaction loads. Modification to components and/or design may alter performance and must be evaluated by the EOR.

TYPICAL DETAIL TYPE:

ELECTRICAL & INSTRUMENTATION APPLICATION

TYPICAL DETAIL DESCRIPTION:

PANEL STAND

DESIGNED BY:	REVIEWED BY:
KL	AJV
DRAWN BY:	ISSUE DATE:
GAB	04 DEC 14

REVISIONS:

NO:	DESCRIPTION:	DATE:
A	ORIGINAL ISSUE	04 DEC 14

TYPICAL DETAIL NOMENCLATURE:

EI-PS56-C

DRAWING NUMBER:	SHEET:
01	1/1

\\hilti.com\US\TEAMS\installations\Projects\TYPICALS\TYPICAL LIBRARY\ELECTRICAL & INSTRUMENTATION (E&I)\CAD\EI-PS56-C.dwg, 12/23/2014 8:26:57 AM

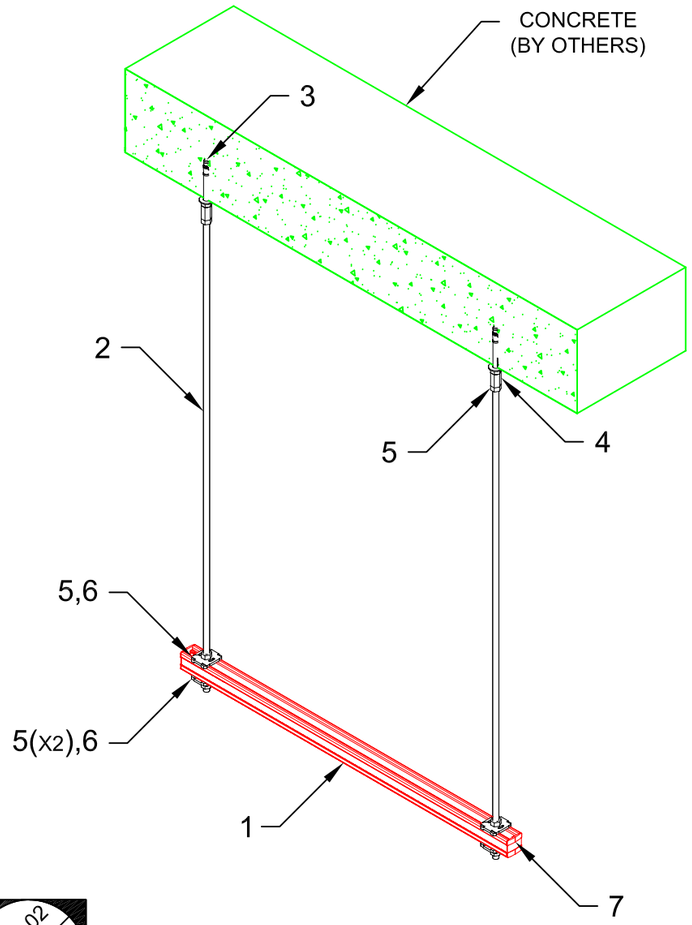

ELEV. 02
SHEET 1/1

01 ISOMETRIC
N.T.S.

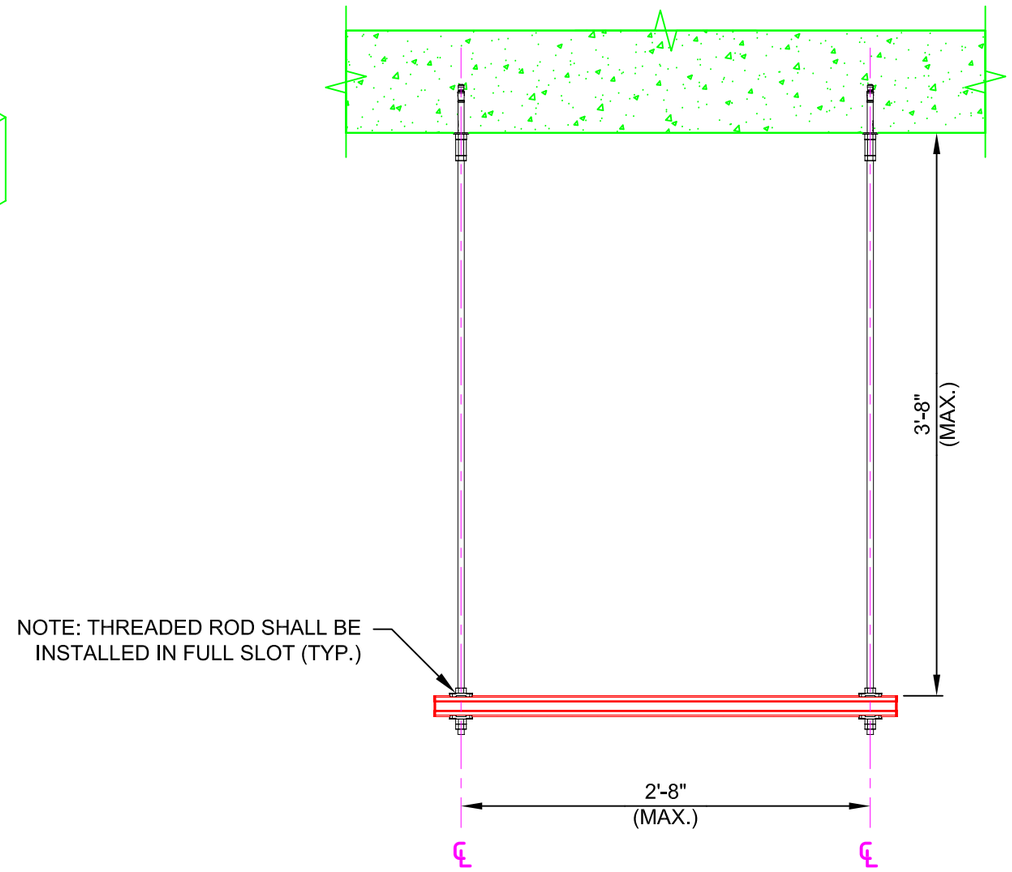

02 ELEVATION
N.T.S.

No.	Unit Qty	Unit	Description	Box Qty	# Boxes Needed	Item No.
1	AS REQ'D	EA	STRUT HS-158-12/PG 10'	1	AS REQ'D	407555
2	AS REQ'D	EA	THREADED ROD 1/2"-10' ZINC	12	AS REQ'D	309388
3	2	EA	STD STUD ANCHOR KB-TZ 1/2X4 1/2	20	1	387513
4	2	EA	1/2" ROD COUPLER	500	1	411748
5	8	EA	HEX NUT-HEAVY DUTY 1/2"	100	1	411753
6	4	EA	BASE PLATE MQZ-L1/2"	20	1	370633
7	4	EA	CHANNEL END CAP MEK RED	50	1	244886

NOTE(S):
1. PRELIMINARY NOT FOR CONSTRUCTION
2. DESIGN ASSUMPTIONS:
   a. NO LOADS CONSIDERED - CONCEPT ONLY
   b. LATERAL LOADS NOT CONSIDERED
   c. BUILDING CODE: NOT SPECIFIED
   d. CORROSION RESISTANCE REQD.: NOT SPECIFIED
3. REFER TO COMPONENT MANUFACTURER'S IFUs FOR REQUIRED INSTALLATION INFO.
4. E.O.R. MUST BE NOTIFIED OF ANY DEVIATIONS FROM EXISTING/ NEW SUBSTRATE CONDITIONS SHOWN HEREIN TO VALIDATE ACCEPTANCE OF THIS HILTI DESIGN PRIOR TO INSTALLATION.

All loading and design criteria supplied by customer is assumed accurate. Only the stated Design Assumptions were considered, and must be verified by the responsible Engineer of Record (EOR). The basis of Hilti component and connection design is the published data in the current Hilti Technical Guide, including material and cross-section properties, allowable load values, factors of safety, methods of calculation, and limiting factors. The EOR must verify suitability for any specific application, and the capacity of the supportive structure to receive the shown configuration and associated reaction loads. Modification to components and/or design may alter performance and must be evaluated by the EOR.

TYPICAL DETAIL TYPE:

ELECTRICAL & INSTRUMENTATION APPLICATION

TYPICAL DETAIL DESCRIPTION:

TRAPEZE - SINGLE

DESIGNED BY:	REVIEWED BY:
KL	AJV
DRAWN BY:	ISSUE DATE:
GAB	08 DEC 14

REVISIONS:

NO:	DESCRIPTION:	DATE:
A	ORIGINAL ISSUE	08 DEC 14

TYPICAL DETAIL NOMENCLATURE:

EI-TR50-C

DRAWING NUMBER:	SHEET:
01	1/1

\\hilti.com\US\TEAMS\installations\Projects\TYPICALS\TYPICAL LIBRARY\ELECTRICAL & INSTRUMENTATION (E&D)\CAD\EI-TR50-C.dwg, 12/23/2014 9:21:34 AM

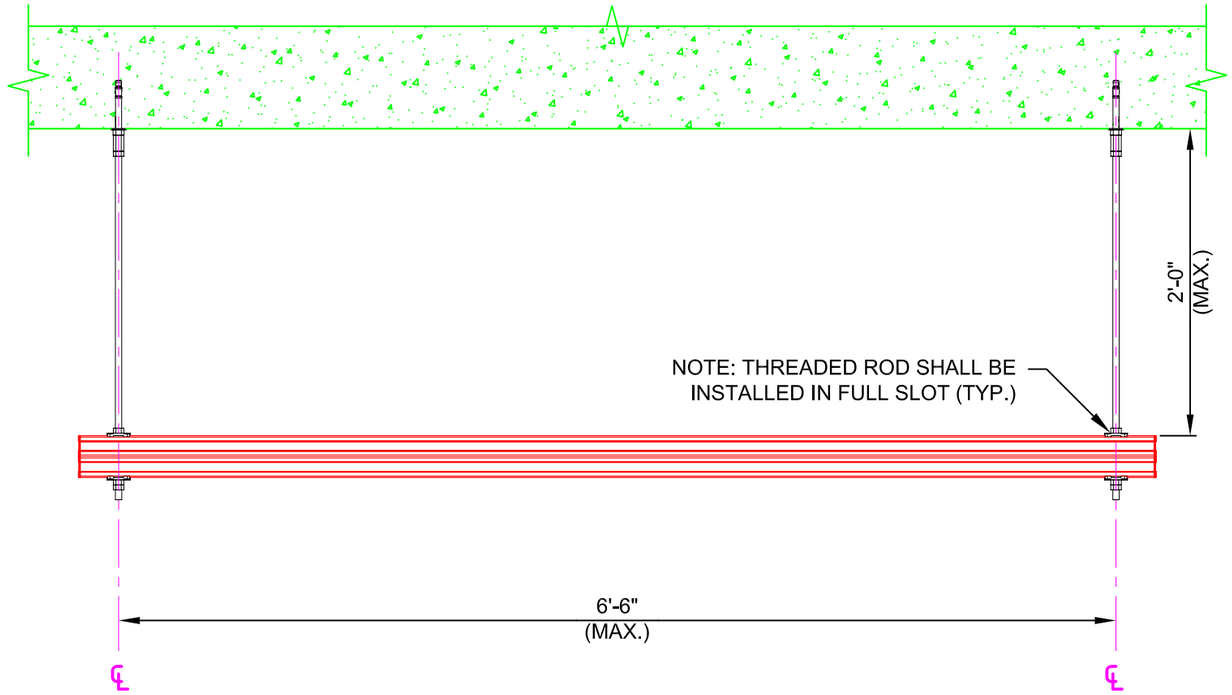

02 ELEVATION
N.T.S.

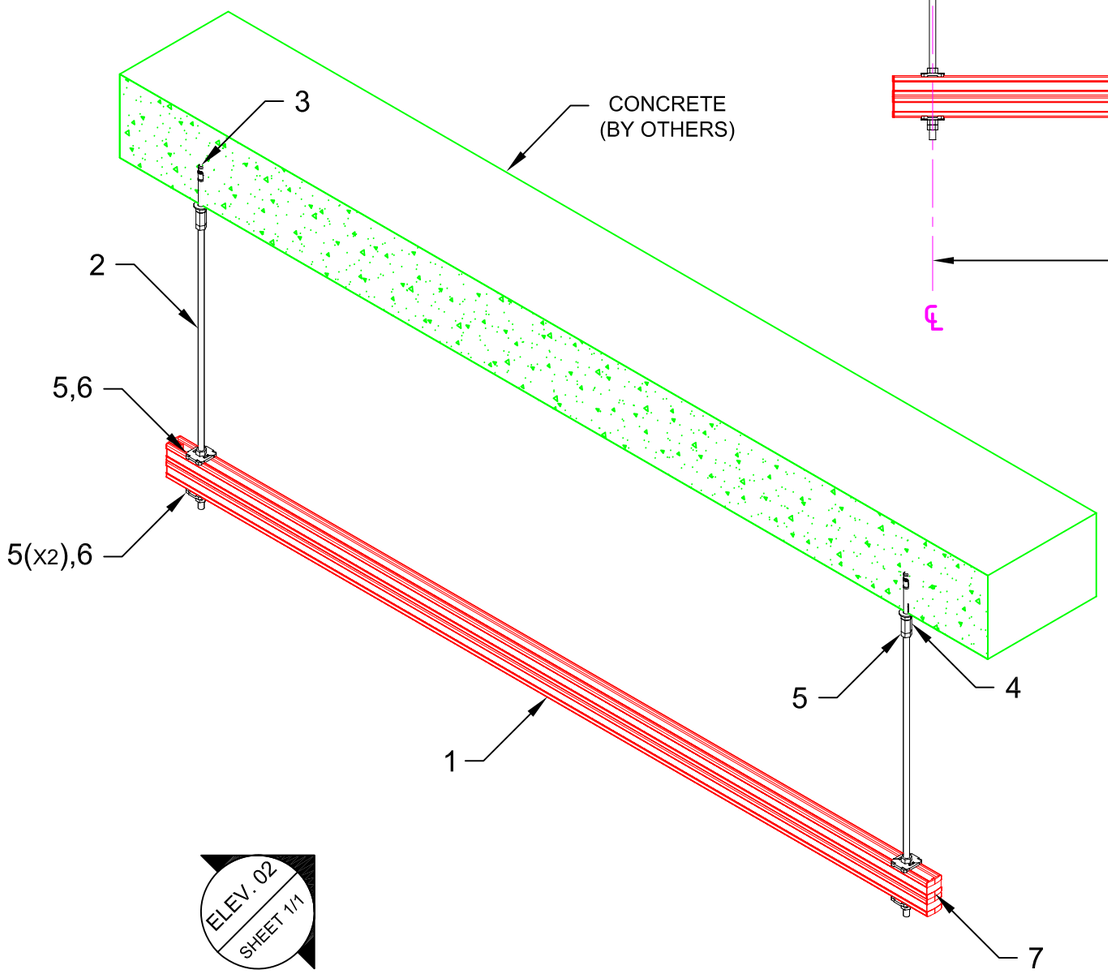

01 ISOMETRIC
N.T.S.

No.	Unit Qty	Unit	Description	Box Qty	# Boxes Needed	Item No.
1	AS REQ'D	EA	STRUT HS-158-12/PG 10' B2B	1	AS REQ'D	2007082
2	AS REQ'D	EA	THREADED ROD 1/2"-10' ZINC	12	AS REQ'D	309388
3	2	EA	STD STUD ANCHOR KB-TZ 1/2X4 1/2	20	1	387513
4	2	EA	1/2" ROD COUPLER	500	1	411748
5	8	EA	HEX NUT-HEAVY DUTY 1/2"	100	1	411753
6	4	EA	BASE PLATE MQZ-L1/2"	20	1	370633
7	8	EA	CHANNEL END CAP MEK RED	50	1	244886

NOTE(S):
1. PRELIMINARY NOT FOR CONSTRUCTION
2. DESIGN ASSUMPTIONS:
   a. NO LOADS CONSIDERED - CONCEPT ONLY
   b. LATERAL LOADS NOT CONSIDERED
   c. BUILDING CODE: NOT SPECIFIED
   d. CORROSION RESISTANCE REQD.: NOT SPECIFIED
3. REFER TO COMPONENT MANUFACTURER'S IFUs FOR REQUIRED INSTALLATION INFO.
4. E.O.R. MUST BE NOTIFIED OF ANY DEVIATIONS FROM EXISTING/ NEW SUBSTRATE CONDITIONS SHOWN HEREIN TO VALIDATE ACCEPTANCE OF THIS HILTI DESIGN PRIOR TO INSTALLATION.

All loading and design criteria supplied by customer is assumed accurate. Only the stated Design Assumptions were considered, and must be verified by the responsible Engineer of Record (EOR). The basis of Hilti component and connection design is the published data in the current Hilti Technical Guide, including material and cross-section properties, allowable load values, factors of safety, methods of calculation, and limiting factors. The EOR must verify suitability for any specific application, and the capacity of the supportive structure to receive the shown configuration and associated reaction loads. Modification to components and/or design may alter performance and must be evaluated by the EOR.

TYPICAL DETAIL TYPE:
ELECTRICAL & INSTRUMENTATION APPLICATION

TYPICAL DETAIL DESCRIPTION:
TRAPEZE - SINGLE

DESIGNED BY:	REVIEWED BY:
KL	AJV
DRAWN BY:	ISSUE DATE:
GAB	08 DEC 14

REVISIONS:

NO:	DESCRIPTION:	DATE:
A	ORIGINAL ISSUE	08 DEC 14

TYPICAL DETAIL NOMENCLATURE:
EI-TR51-C

DRAWING NUMBER:	SHEET:
01	1/1

\\hilti.com\US\TEAMS\installations\Projects\TYPICALS\TYPICAL LIBRARY\ELECTRICAL & INSTRUMENTATION (E&I)\CAD\EI-TR51-C.dwg, 12/23/2014 9:22:15 AM

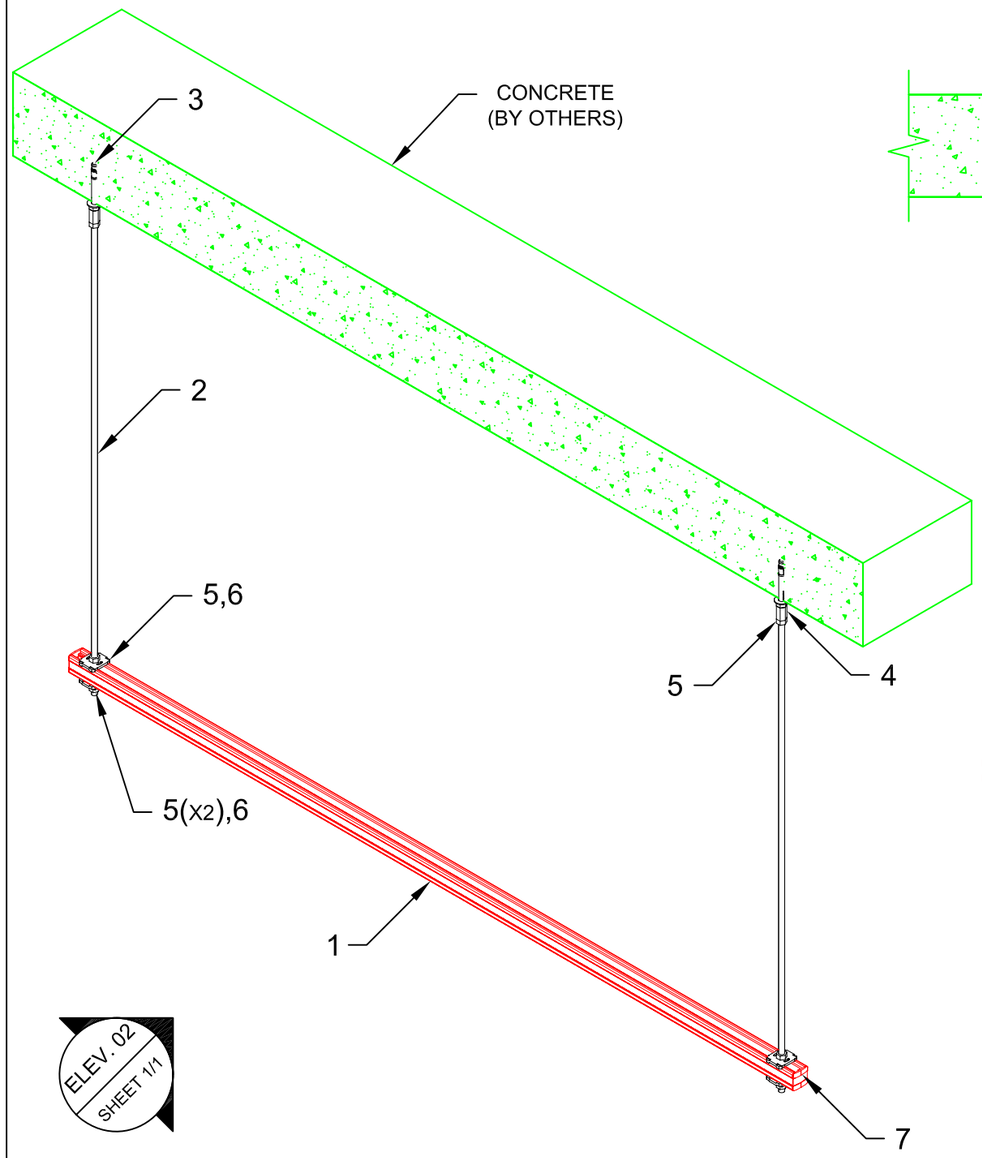

01 ISOMETRIC
N.T.S.

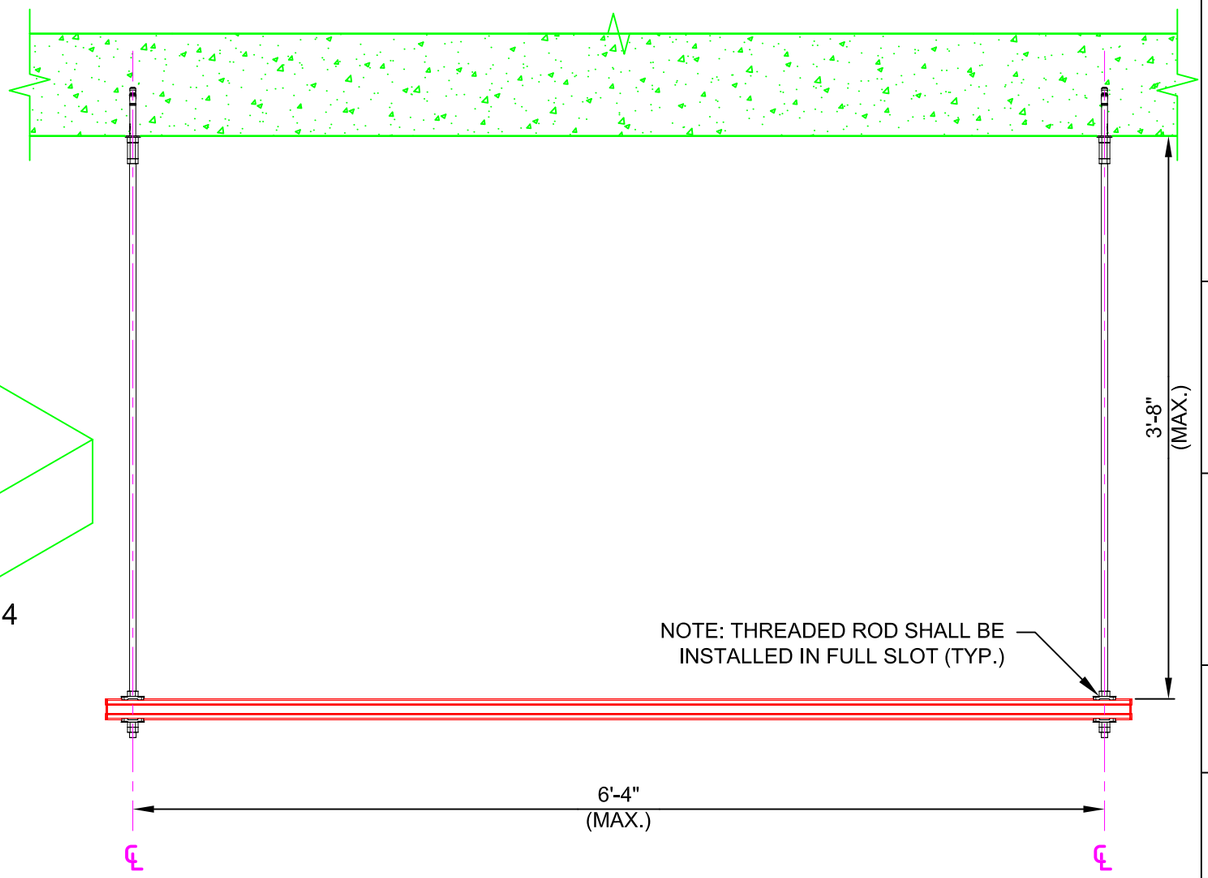

02 ELEVATION
N.T.S.

No.	Unit Qty	Unit	Description	Box Qty	# Boxes Needed	Item No.
1	AS REQ'D	EA	STRUT HS-158-12/PG 10'	1	AS REQ'D	407555
2	AS REQ'D	EA	THREADED ROD 1/2"-10' ZINC	12	AS REQ'D	309388
3	2	EA	STD STUD ANCHOR KB-TZ 1/2X4 1/2	20	1	387513
4	2	EA	1/2" ROD COUPLER	500	1	411748
5	8	EA	HEX NUT-HEAVY DUTY 1/2"	100	1	411753
6	4	EA	BASE PLATE MQZ-L1/2"	20	1	370633
7	4	EA	CHANNEL END CAP MEK RED	50	1	244886

NOTE(S):
1. PRELIMINARY NOT FOR CONSTRUCTION
2. DESIGN ASSUMPTIONS:
   a. NO LOADS CONSIDERED - CONCEPT ONLY
   b. LATERAL LOADS NOT CONSIDERED
   c. BUILDING CODE: NOT SPECIFIED
   d. CORROSION RESISTANCE REQD.: NOT SPECIFIED
3. REFER TO COMPONENT MANUFACTURER'S IFUs FOR REQUIRED INSTALLATION INFO.
4. E.O.R. MUST BE NOTIFIED OF ANY DEVIATIONS FROM EXISTING/ NEW SUBSTRATE CONDITIONS SHOWN HEREIN TO VALIDATE ACCEPTANCE OF THIS HILTI DESIGN PRIOR TO INSTALLATION.

All loading and design criteria supplied by customer is assumed accurate. Only the stated Design Assumptions were considered, and must be verified by the responsible Engineer of Record (EOR). The basis of Hilti component and connection design is the published data in the current Hilti Technical Guide, including material and cross-section properties, allowable load values, factors of safety, methods of calculation, and limiting factors. The EOR must verify suitability for any specific application, and the capacity of the supportive structure to receive the shown configuration and associated reaction loads. Modification to components and/or design may alter performance and must be evaluated by the EOR.

TYPICAL DETAIL TYPE:

ELECTRICAL & INSTRUMENTATION APPLICATION

TYPICAL DETAIL DESCRIPTION:

TRAPEZE - SINGLE

DESIGNED BY:	REVIEWED BY:
KL	AJV
DRAWN BY:	ISSUE DATE:
GAB	08 DEC 14

REVISIONS:

NO:	DESCRIPTION:	DATE:
A	ORIGINAL ISSUE	08 DEC 14

TYPICAL DETAIL NOMENCLATURE:

EI-TR52-C

DRAWING NUMBER:	SHEET:
01	1/1

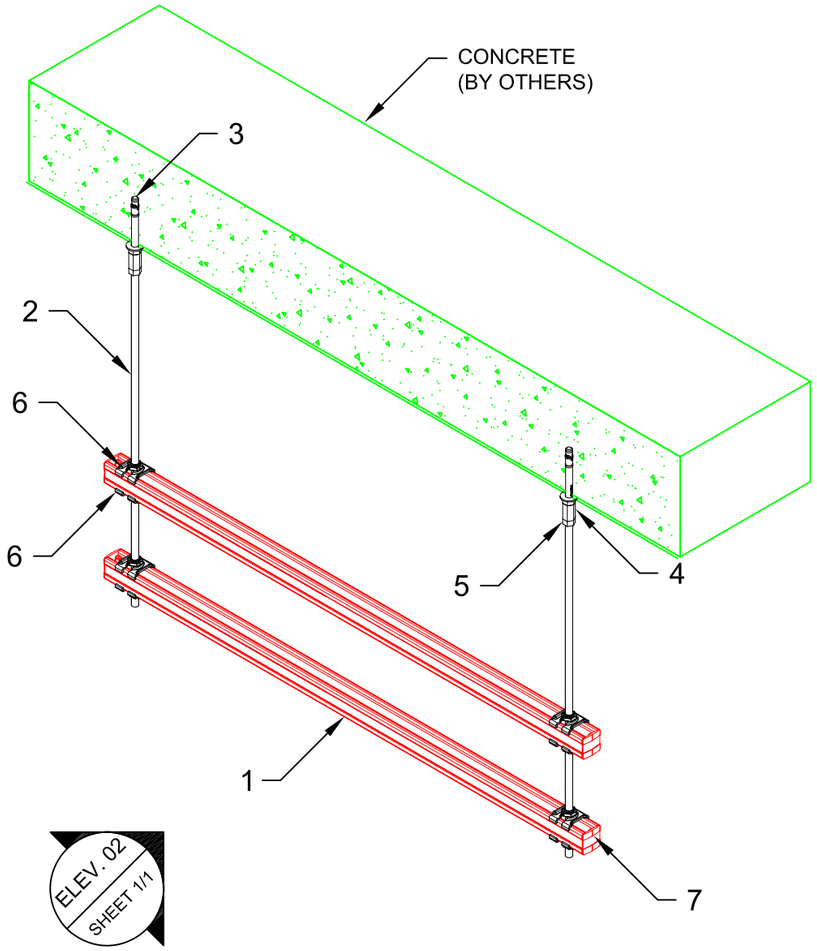

01 ISOMETRIC
N.T.S.

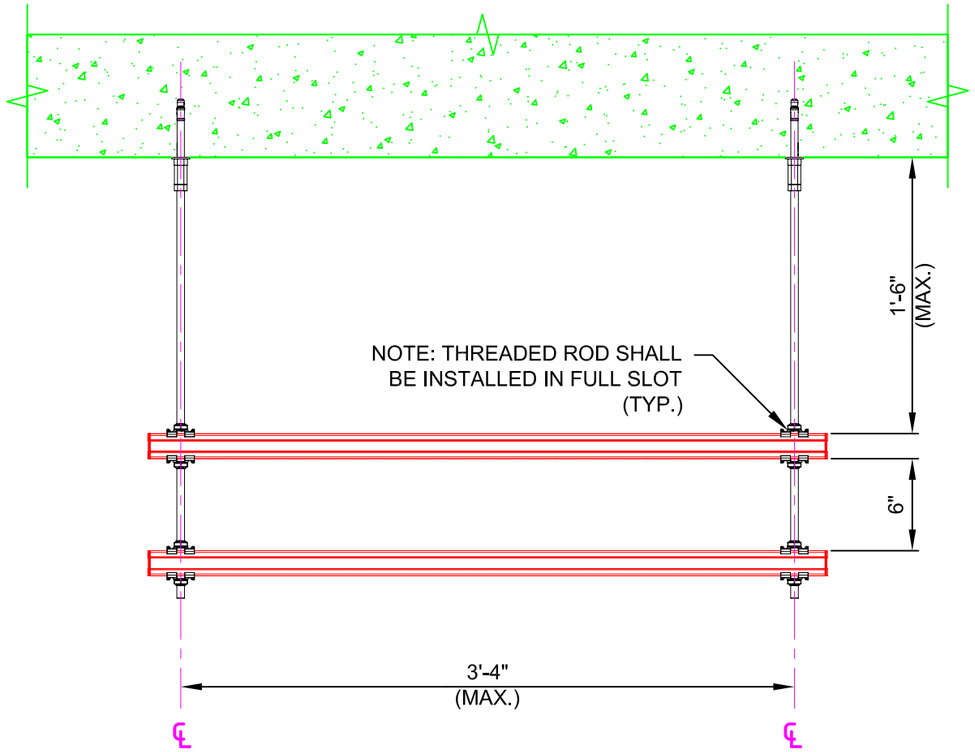

02 ELEVATION
N.T.S.

No.	Unit Qty	Unit	Description	Box Qty	# Boxes Needed	Item No.
1	AS REQ'D	EA	STRUT HS-158-12/PG 10'	1	AS REQ'D	407555
2	AS REQ'D	EA	THREADED ROD 1/2"-10' ZINC	12	AS REQ'D	309388
3	2	EA	STD STUD ANCHOR KB-TZ 1/2X4 1/2	20	1	387513
4	2	EA	1/2" ROD COUPLER	500	1	411748
5	2	EA	HEX NUT-HEAVY DUTY 1/2"	100	1	411753
6	8	EA	1/2" SPLIT NUT AND SLOT SQUARE WASHER	40	1	2008781
7	8	EA	CHANNEL END CAP MEK RED	50	1	244886

NOTE(S):
1. PRELIMINARY NOT FOR CONSTRUCTION
2. DESIGN ASSUMPTIONS:
   a. NO LOADS CONSIDERED - CONCEPT ONLY
   b. LATERAL LOADS NOT CONSIDERED
   c. BUILDING CODE: NOT SPECIFIED
   d. CORROSION RESISTANCE REQD.: NOT SPECIFIED
3. REFER TO COMPONENT MANUFACTURER'S IFUs FOR REQUIRED INSTALLATION INFO.
4. E.O.R. MUST BE NOTIFIED OF ANY DEVIATIONS FROM EXISTING/ NEW SUBSTRATE CONDITIONS SHOWN HEREIN TO VALIDATE ACCEPTANCE OF THIS HILTI DESIGN PRIOR TO INSTALLATION.

All loading and design criteria supplied by customer is assumed accurate. Only the stated Design Assumptions were considered, and must be verified by the responsible Engineer of Record (EOR). The basis of Hilti component and connection design is the published data in the current Hilti Technical Guide, including material and cross-section properties, allowable load values, factors of safety, methods of calculation, and limiting factors. The EOR must verify suitability for any specific application, and the capacity of the supportive structure to receive the shown configuration and associated reaction loads. Modification to components and/or design may alter performance and must be evaluated by the EOR.

TYPICAL DETAIL TYPE:
ELECTRICAL & INSTRUMENTATION APPLICATION

TYPICAL DETAIL DESCRIPTION:
TRAPEZE - DOUBLE

DESIGNED BY: KL
REVIEWED BY: AJV
DRAWN BY: GAB
ISSUE DATE: 08 DEC 14

REVISIONS:

NO:	DESCRIPTION:	DATE:
A	ORIGINAL ISSUE	08 DEC 14

TYPICAL DETAIL NOMENCLATURE:
EI-TR53-C

DRAWING NUMBER: 01
SHEET: 1/1

\\hilti.com\US\TEAMS\installations\Projects\TYPICALS\TYPICAL LIBRARY\ELECTRICAL & INSTRUMENTATION (E&I)\CAD\EI-TR53-C.dwg, 12/23/2014 9:24:39 AM

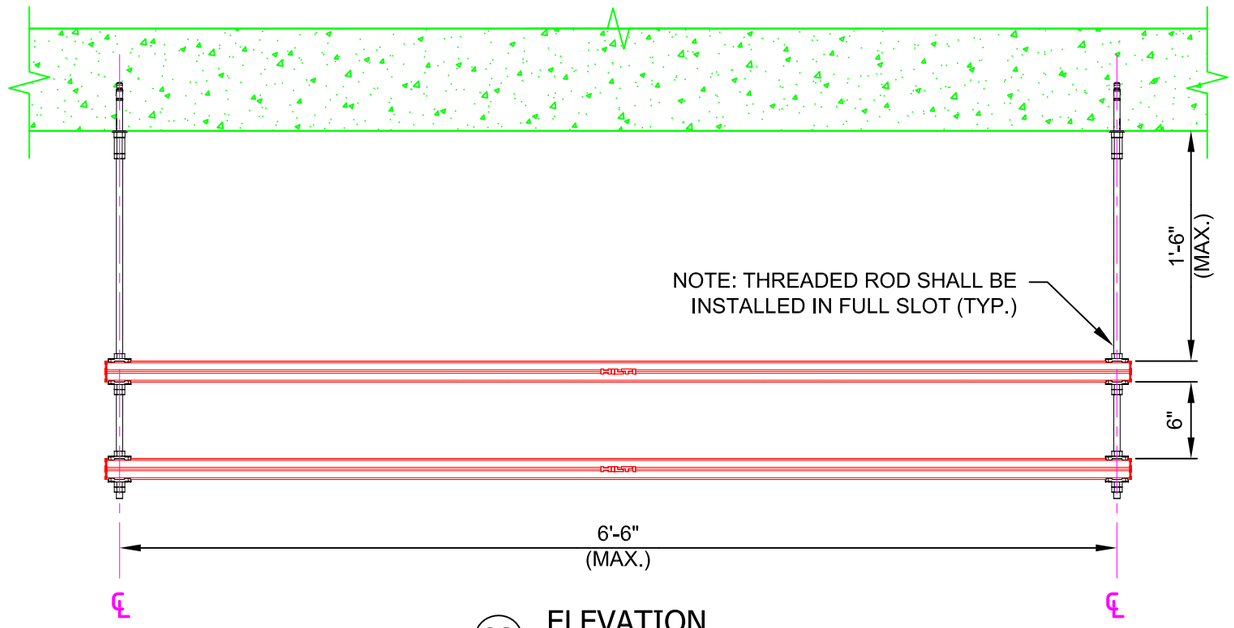

02 ELEVATION
N.T.S.

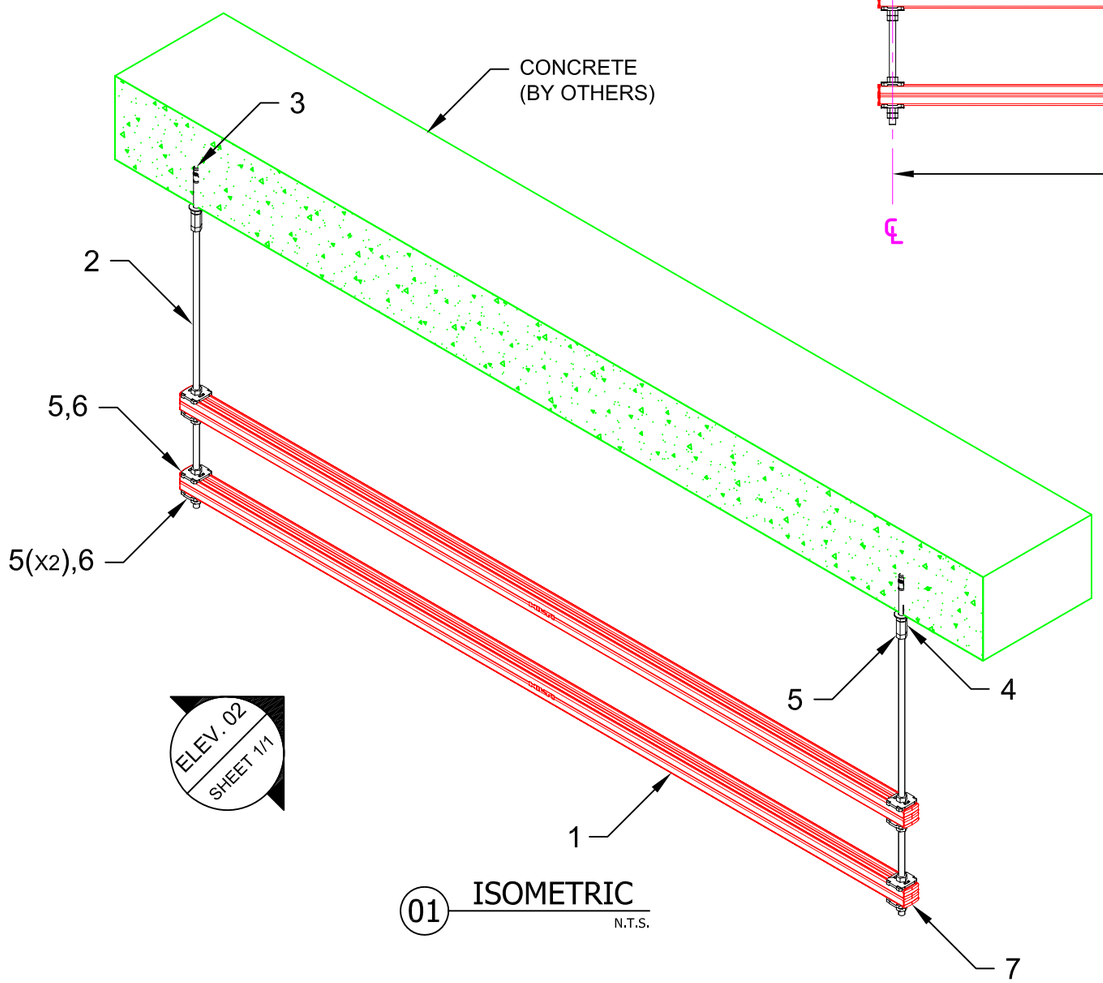

01 ISOMETRIC
N.T.S.

No.	Unit Qty	Unit	Description	Box Qty	# Boxes Needed	Item No.
1	2	EA	STRUT HS-158-12/PG 6'-8"	1	2	407554
2	AS REQ'D	EA	THREADED ROD 1/2"-10' ZINC	12	AS REQ'D	309388
3	2	EA	STD STUD ANCHOR KB-TZ 1/2X4 1/2	20	1	387513
4	2	EA	1/2" ROD COUPLER	500	1	411748
5	8	EA	HEX NUT-HEAVY DUTY 1/2"	100	1	411753
6	4	EA	BASE PLATE MQZ-L1/2"	20	1	370633
7	12	EA	CHANNEL END CAP MEK RED	50	1	244886

NOTE(S):
1. PRELIMINARY NOT FOR CONSTRUCTION
2. DESIGN ASSUMPTIONS:
   a. NO LOADS CONSIDERED - CONCEPT ONLY
   b. LATERAL LOADS NOT CONSIDERED
   c. BUILDING CODE: NOT SPECIFIED
   d. CORROSION RESISTANCE REQD.: NOT SPECIFIED
3. REFER TO COMPONENT MANUFACTURER'S IFUs FOR REQUIRED INSTALLATION INFO.
4. E.O.R. MUST BE NOTIFIED OF ANY DEVIATIONS FROM EXISTING/ NEW SUBSTRATE CONDITIONS SHOWN HEREIN TO VALIDATE ACCEPTANCE OF THIS HILTI DESIGN PRIOR TO INSTALLATION.

All loading and design criteria supplied by customer is assumed accurate. Only the stated Design Assumptions were considered, and must be verified by the responsible Engineer of Record (EOR). The basis of Hilti component and connection design is the published data in the current Hilti Technical Guide, including material and cross-section properties, allowable load values, factors of safety, methods of calculation, and limiting factors. The EOR must verify suitability for any specific application, and the capacity of the supportive structure to receive the shown configuration and associated reaction loads. Modification to components and/or design may alter performance and must be evaluated by the EOR.

TYPICAL DETAIL TYPE:

ELECTRICAL & INSTRUMENTATION APPLICATION

TYPICAL DETAIL DESCRIPTION:

TRAPEZE - DOUBLE

DESIGNED BY: KL

REVIEWED BY: AJV

DRAWN BY: GAB

ISSUE DATE: 08 DEC 14

REVISIONS:

NO:	DESCRIPTION:	DATE:
A	ORIGINAL ISSUE	08 DEC 14

TYPICAL DETAIL NOMENCLATURE:

EI-TR54-C

DRAWING NUMBER: 01

SHEET: 1/1

\\hilti.com\US\TEAMS\installations\Projects\TYPICALS\TYPICAL LIBRARY\ELECTRICAL & INSTRUMENTATION (E&I)\CAD\EI-TR54-C.dwg, 12/23/2014 9:26:34 AM