Maximum"L1" (in)	Allowable Vertical Load (lbs)	Allowable Transverse Load (lbs)	Allowable Longitudinal Load (lbs)
48	1892	0	0
48	1892	567	0
48	1750	0	525
60	1742	0	0
60	1742	522	
60	1416	0	425
72	1607	0	0
72	1607	482	0
72	1250	0	375

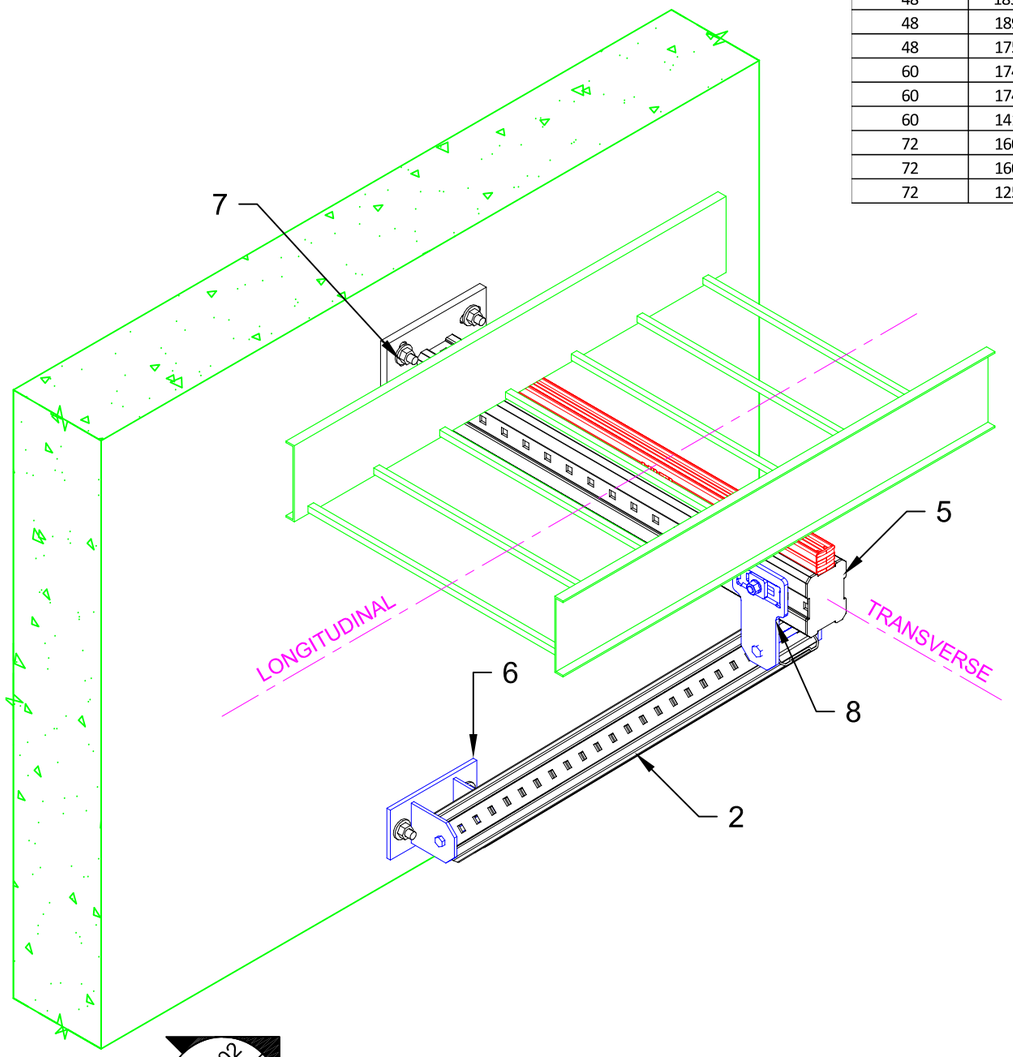

ELEV. 02
SHEET 1/1

01 ISOMETRIC
N.T.S.

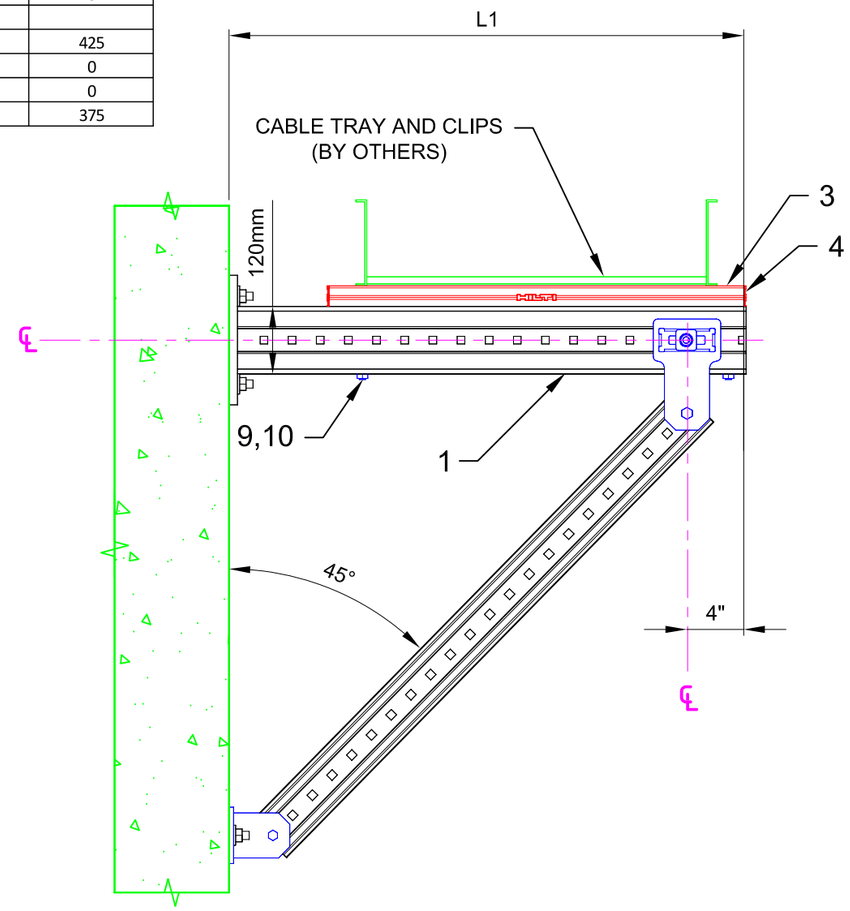

02 ELEVATION
N.T.S.

No.	Unit Qty	Unit	Description	Box Qty	# Boxes Needed	Item No.
1	1	EA	CONNECTOR MIC-C120-D-2000 WELDED BRACKET	1	1	270472
2	AS REQ'D	EA	GIRDER MI-90 3M	1	AS REQ'D	304798
3	AS REQ'D	EA	STRUT HS-158-12/HDG 10'	1	AS REQ'D	407570
4	4	EA	CHANNEL END CAP MEK RED	50	1	244886
5	1	EA	GIRDER END CAP MIA-EC120	25	1	432078
6	1	EA	CONNECTOR MIC-CU-MA CONCRETE	4	1	304828
7	6	EA	USE KB3 OR KB-TZ AS APPROPRIATE	VARIES	VARIES	VARIES
8	1	EA	CONNECTOR MIC-U-MA	2	1	304806
9	2	EA	ONEHAND SCREW MIA-OH120	10	1	304890
10	2	EA	PREVAIL TORQUE HEX NUT M12-F-SL-WS 3/4"	100	1	382897

NOTE(S):

1. ALLOWABLE LOADS CONSIDER APPROPRIATE LOAD FACTORS AND LOAD COMBINATIONS PER APPLICABLE CODES AND STANDARDS.
2. ALL LOADS ASSUMED TO ACT AT HORIZONTAL ℄ OF CABLE TRAY WHICH IS SITTING DIRECTLY ON TOP OF MI GIRDER, U.N.O.
3. VERTICAL LOAD APPLIED WITH ONE HORIZONTAL LOAD AT A TIME.
4. CABLE TRAY HORIZONTAL OFFSET FROM MI POST ℄ = 0"

All loading and design criteria supplied by customer is assumed accurate. Only the stated Design Assumptions were considered, and must be verified by the responsible Engineer of Record (EOR). The basis of Hilti component and connection design is the published data in the current Hilti Technical Guide, including material and cross-section properties, allowable load values, factors of safety, methods of calculation, and limiting factors. The EOR must verify suitability for any specific application, and the capacity of the supportive structure to receive the shown configuration and associated reaction loads. Modification to components and/or design may alter performance and must be evaluated by the EOR.

PROJECT NAME:

TYPICAL DETAILS

SERVICE REQUEST DESCRIPTION:

CABLE TRAY
BRACED CANTILEVER
CONCRETE

DESIGNED BY:	REVIEWED BY:
AJV	ISE
DRAWN BY:	ISSUE DATE:
GAB	22 DEC 14

REVISIONS:

NO:	DESCRIPTION:	DATE:
A	ORIGINAL ISSUE	22 DEC 14

SERVICE REQUEST NUMBER:

TD-CT-BC02-C

DRAWING NUMBER:	SHEET:
01	1/1