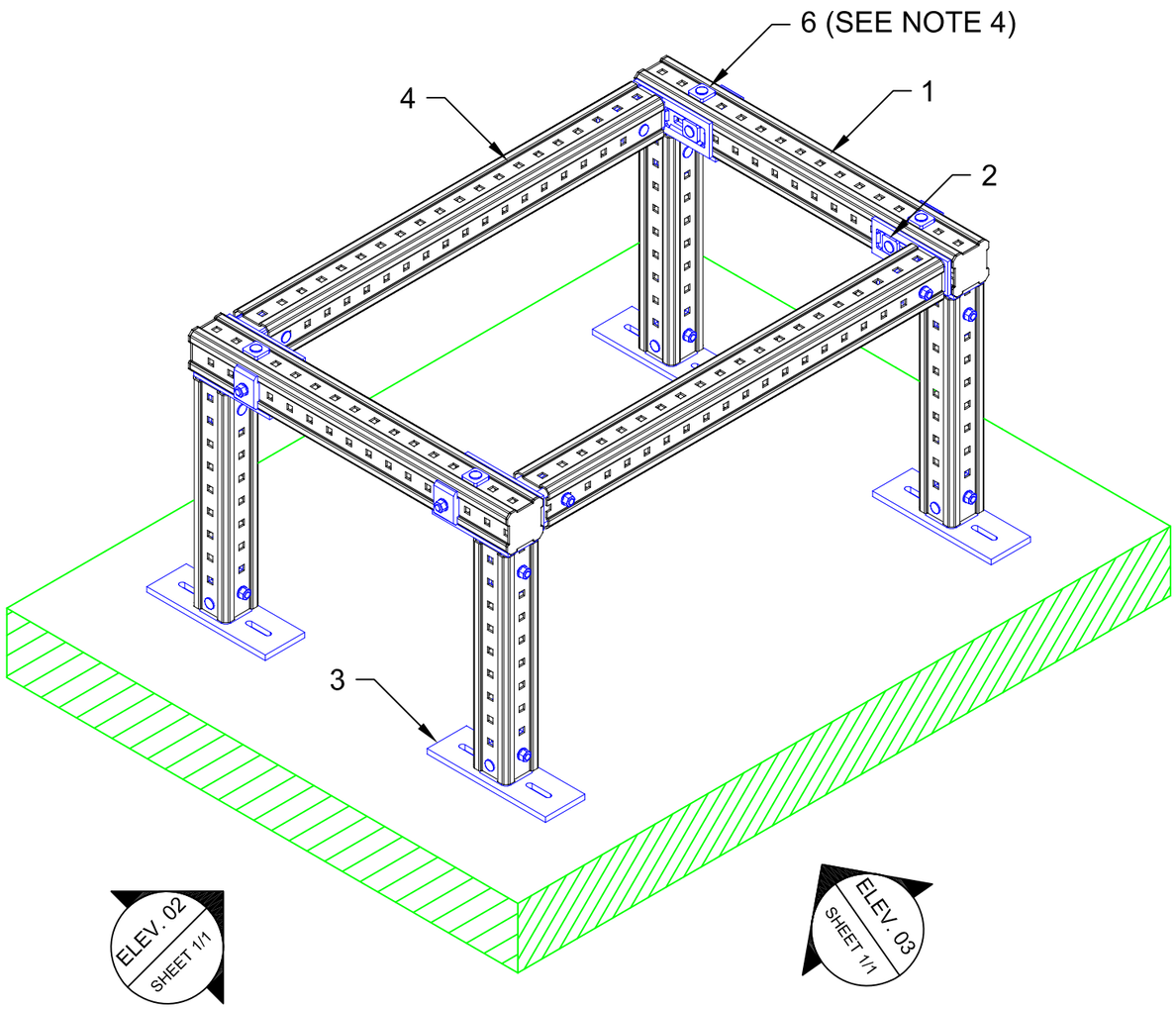

01 ISOMETRIC
N.T.S.

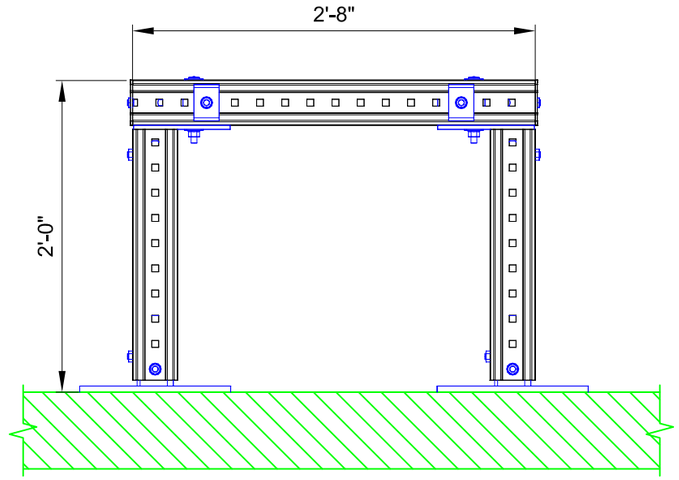

02 ELEVATION
N.T.S.

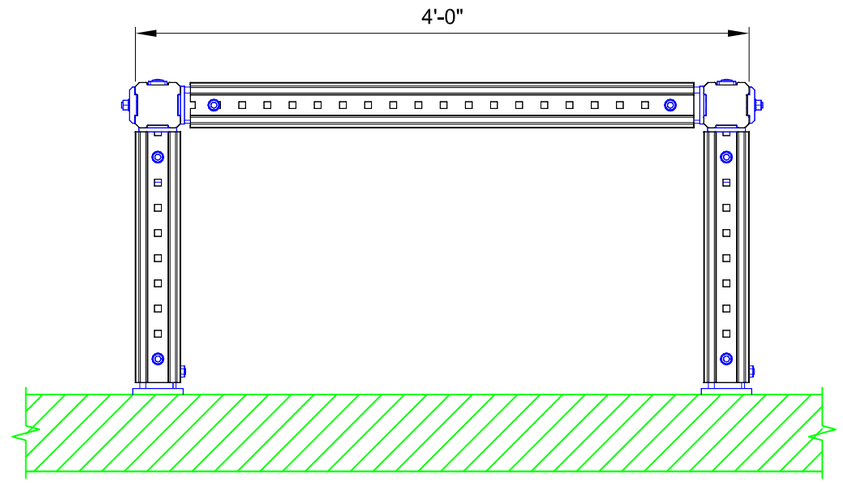

03 ELEVATION
N.T.S.

No.	Unit Qty	Unit	Description	Box Qty	# Boxes Needed	Item No.
1	AS REQ'D	EA	GIRDER MI-90 3M	1	AS REQ'D	304798
2	8	EA	CONNECTOR MIC-90-U	4	2	304803
3	4	EA	CONNECTOR MIC-S90-AA STEEL	2	2	304811
4	4	EA	GIRDER END CAP MIA-EC90	25	1	432077
5	4	EA	TOOTHED PLATE MIA-TP	20	1	305707

NOTE(S):

1. PRELIMINARY, NOT FOR CONSTRUCTION
2. DESIGN ASSUMPTIONS:
   a. NO LOADS CONSIDERED - CONCEPT ONLY
   b. LATERAL LOADS NOT CONSIDERED
   c. BUILDING CODE:NOT SPECIFIED
   d. CORROSION RESISTANCE REQD.: NOT SPECIFIED
2. REFER TO COMPONENT MANUFACTURER'S IFUs FOR REQUIRED INSTALLATION INFO.
3. E.O.R. MUST BE NOTIFIED OF ANY DEVIATIONS FROM EXISTING/ NEW SUBSTRATE CONDITIONS SHOWN HEREIN TO VALIDATE ACCEPTANCE OF THIS HILTI DESIGN PRIOR TO INSTALLATION.

All loading and design criteria supplied by customer is assumed accurate. Only the stated Design Assumptions were considered, and must be verified by the responsible Engineer of Record (EOR). The basis of Hilti component and connection design is the published data in the current Hilti Technical Guide, including material and cross-section properties, allowable load values, factors of safety, methods of calculation, and limiting factors. The EOR must verify suitability for any specific application, and the capacity of the supportive structure to receive the shown configuration and associated reaction loads. Modification to components and/or design may alter performance and must be evaluated by the EOR.

PROJECT NAME:

EQUIPMENT SUPPORT

SERVICE REQUEST DESCRIPTION:

CONTROL RACK

DESIGNED BY:	REVIEWED BY:
KL	MES
DRAWN BY:	ISSUE DATE:
BAP	26 FEB 15

REVISIONS:

NO:	DESCRIPTION:	DATE:
A	ORIGINAL ISSUE	26 FEB 15

SERVICE REQUEST NUMBER:

EQP-01-NA

DRAWING NUMBER:	SHEET:
01	1/1