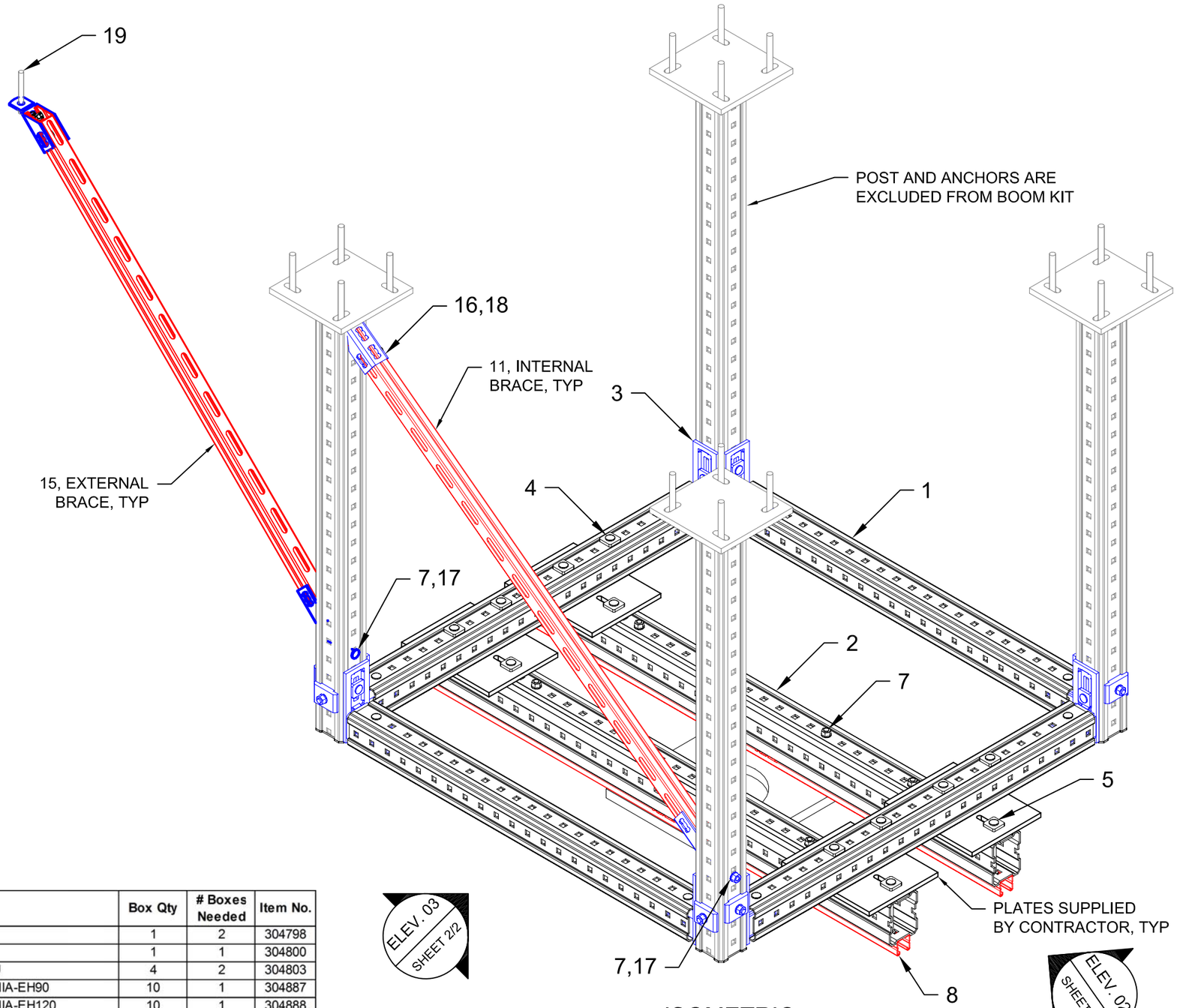

01 ISOMETRIC

N.T.S.

	No.	Unit Qty	Unit	Description	Box Qty	# Boxes Needed	Item No.
Boom	1	2	EA	GIRDER MI-90 3M	1	2	304798
	2	1	EA	GIRDER MI-120 3M	1	1	304800
	3	8	EA	CONNECTOR MIC-90-U	4	2	304803
	4	8	EA	EASYHAND SCREW MIA-EH90	10	1	304887
	5	8	EA	EASYHAND SCREW MIA-EH120	10	1	304888
	6	8	EA	ONEHAND SCREW MIA-OH120	10	1	304890
	7	24	EA	MI HEX NUT M12-F-SL-WS 3/4"	100	1	382897
	8	2	EA	STRUT HS-158-12/PG 4'	1	2	407552
	9	4	EA	WING NUT MQM-F1/2"	50	1	377883
	10	4	EA	1/2" x 1-3/4" BOLT	SPECIAL	SPECIAL	SPECIAL
Internal Brace	11	1	EA	STRUT HS-158-12/PG 6'	1	1	407553
	12	2	EA	RAIL SUPPORT MQP-45	10	1	369649
	13	2	EA	M12 x 120-F/8.8	40	1	283595
	14	2	EA	CHANNEL CONNECTOR MQN	50	1	369623
External Brace	15	1	EA	STRUT HS-158-12/PG 6'	1	1	407553
	16	2	EA	RAIL SUPPORT MQP-45	10	1	369649
	17	1	EA	M12 x 120-F/8.8	40	1	283595
	18	2	EA	CHANNEL CONNECTOR MQN	50	1	369623
	19	1	EA	STD STUD ANCHOR KB-TZ 1/2X3 3/4	20	1	387512

NOTE(S):

1. PRELIMINARY, NOT FOR CONSTRUCTION
2. DESIGN ASSUMPTIONS:
   a. NO LOADS CONSIDERED - CONCEPT ONLY
   b. LATERAL LOADS NOT CONSIDERED
   c. BUILDING CODE:NOT SPECIFIED
   d. CORROSION RESISTANCE REQD.: NOT SPECIFIED
2. REFER TO COMPONENT MANUFACTURER'S IFUs FOR REQUIRED INSTALLATION INFO.
3. E.O.R. MUST BE NOTIFIED OF ANY DEVIATIONS FROM EXISTING/ NEW SUBSTRATE CONDITIONS SHOWN HEREIN TO VALIDATE ACCEPTANCE OF THIS HILTI DESIGN PRIOR TO INSTALLATION.

All loading and design criteria supplied by customer is assumed accurate. Only the stated Design Assumptions were considered, and must be verified by the responsible Engineer of Record (EOR). The basis of Hilti component and connection design is the published data in the current Hilti Technical Guide, including material and cross-section properties, allowable load values, factors of safety, methods of calculation, and limiting factors. The EOR must verify suitability for any specific application, and the capacity of the supportive structure to receive the shown configuration and associated reaction loads. Modification to components and/or design may alter performance and must be evaluated by the EOR.

TYPICAL DETAIL TYPE:

OVERHEAD GRID

TYPICAL DETAIL DESCRIPTION:

MEDICAL

DESIGNED BY:	REVIEWED BY:
MES	
DRAWN BY:	**ISSUE DATE:**
MJR	25 FEB 15

REVISIONS:

NO:	DESCRIPTION:	DATE:
A	ORIGINAL ISSUE	25 FEB 15

TYPICAL DETAIL NOMENCLATURE:

OHG-MED01-C

DRAWING NUMBER:	SHEET:
01	1/6

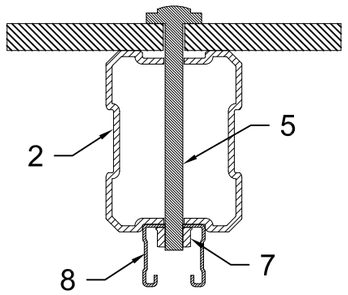

05 SECTION
N.T.S.

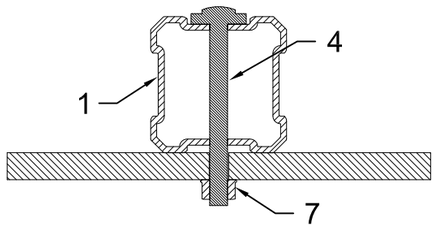

06 SECTION
N.T.S.

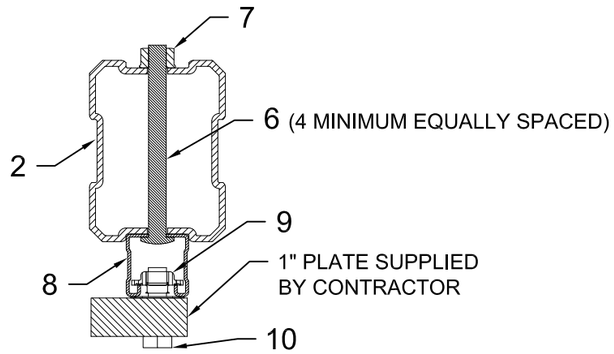

07 SECTION
N.T.S.

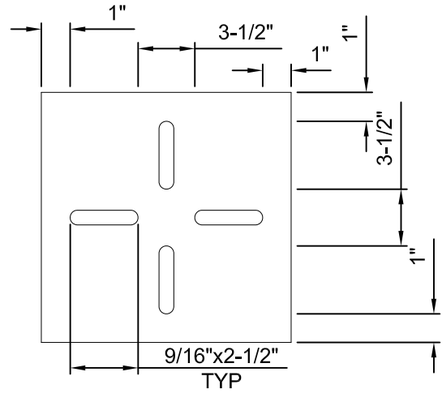

DETAIL 1
CONTRACTOR SUPPLIED PLATE
(10-1/2"x10-1/2"x3/4" A36 PLATE)

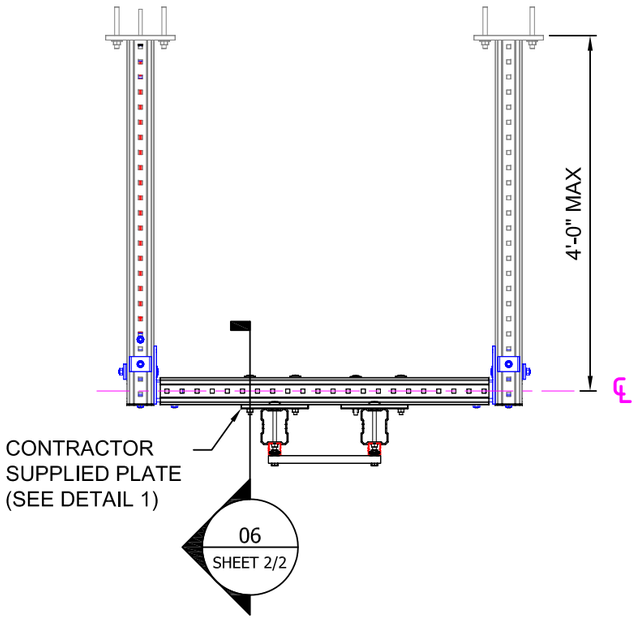

02 ELEVATION
N.T.S.

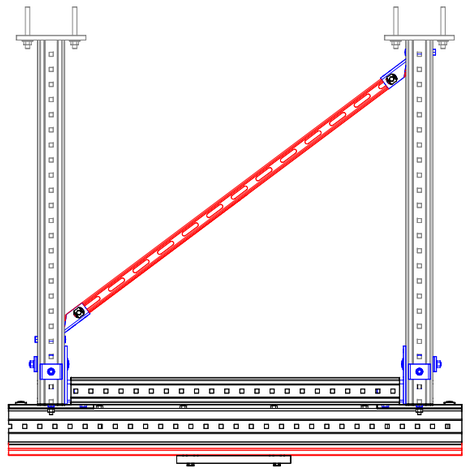

03 ELEVATION
N.T.S.

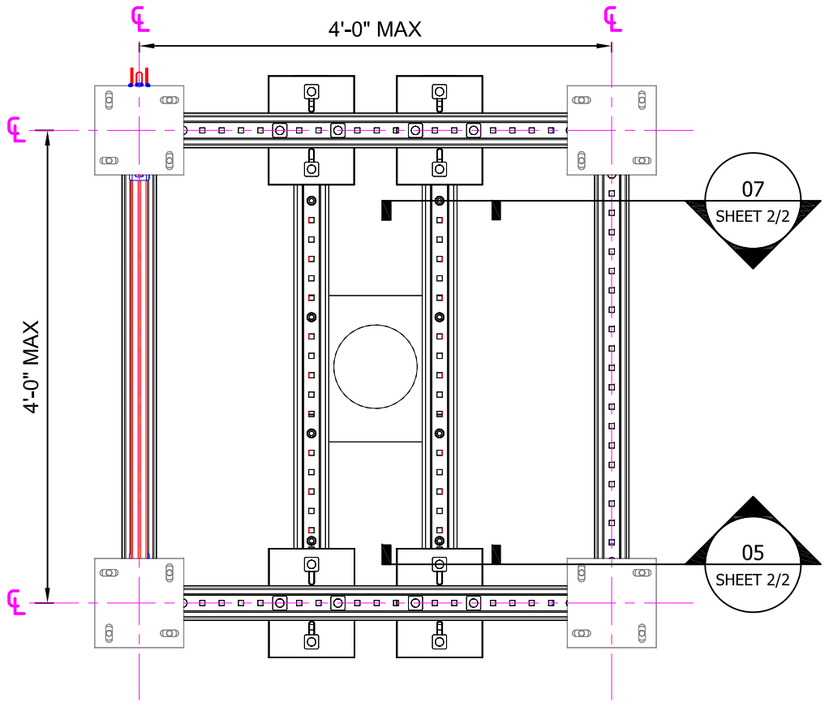

04 PLAN VIEW
N.T.S.

All loading and design criteria supplied by customer is assumed accurate. Only the stated Design Assumptions were considered, and must be verified by the responsible Engineer of Record (EOR). The basis of Hilti component and connection design is the published data in the current Hilti Technical Guide, including material and cross-section properties, allowable load values, factors of safety, methods of calculation, and limiting factors. The EOR must verify suitability for any specific application, and the capacity of the supportive structure to receive the shown configuration and associated reaction loads. Modification to components and/or design may alter performance and must be evaluated by the EOR.

TYPICAL DETAIL TYPE:

OVERHEAD GRID

TYPICAL DETAIL DESCRIPTION:

MEDICAL

DESIGNED BY:	REVIEWED BY:
MES	
DRAWN BY:	ISSUE DATE:
MJR	25 FEB 15

REVISIONS:

NO:	DESCRIPTION:	DATE:
A	ORIGINAL ISSUE	25 FEB 15

TYPICAL DETAIL NOMENCLATURE:

OHG-MED01-C

DRAWING NUMBER:	SHEET:
01	2/6

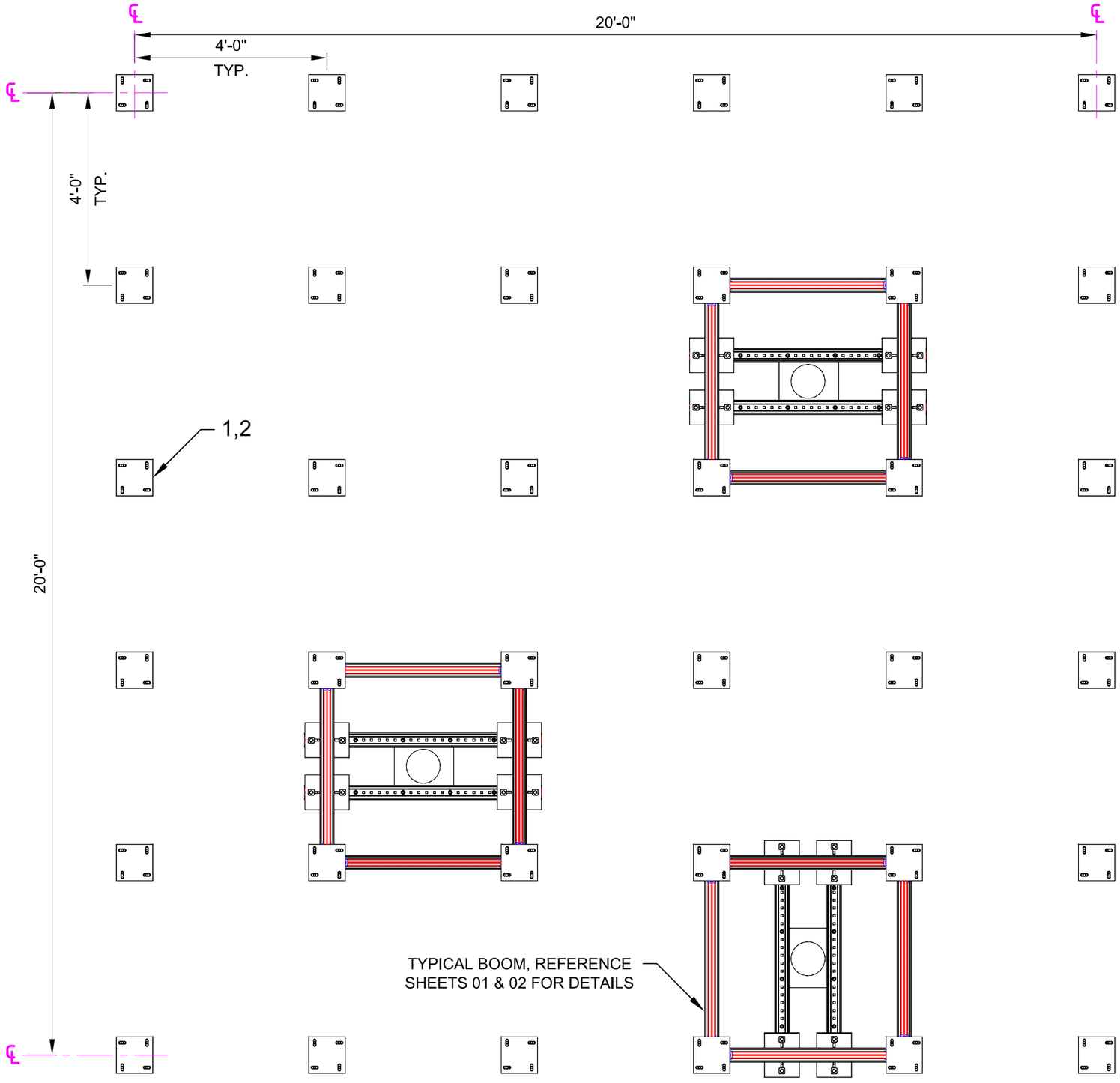

01 PLAN VIEW
N.T.S.

No.	Unit Qty	Unit	Description	Box Qty	# Boxes Needed	Item No.
1	36	EA	CONNECTOR MIC-C90-D-1000 WELDED BRACKET	1	36	267791
2	36	EA	GIRDER END CAP MIA-EC90	25	2	432077
3	144	EA	STD STUD ANCHOR KB-TZ 1/2X3 3/4	20	8	387512

All loading and design criteria supplied by customer is assumed accurate. Only the stated Design Assumptions were considered, and must be verified by the responsible Engineer of Record (EOR). The basis of Hilti component and connection design is the published data in the current Hilti Technical Guide, including material and cross-section properties, allowable load values, factors of safety, methods of calculation, and limiting factors. The EOR must verify suitability for any specific application, and the capacity of the supportive structure to receive the shown configuration and associated reaction loads. Modification to components and/or design may alter performance and must be evaluated by the EOR.

TYPICAL DETAIL TYPE:

OVERHEAD GRID

TYPICAL DETAIL DESCRIPTION:

MEDICAL

DESIGNED BY: MES

REVIEWED BY:

DRAWN BY: MJR

ISSUE DATE: 25 FEB 15

REVISIONS:

NO:	DESCRIPTION:	DATE:
A	ORIGINAL ISSUE	25 FEB 15

TYPICAL DETAIL NOMENCLATURE:

OHG-MED01-C

DRAWING NUMBER: 01

SHEET: 3/6

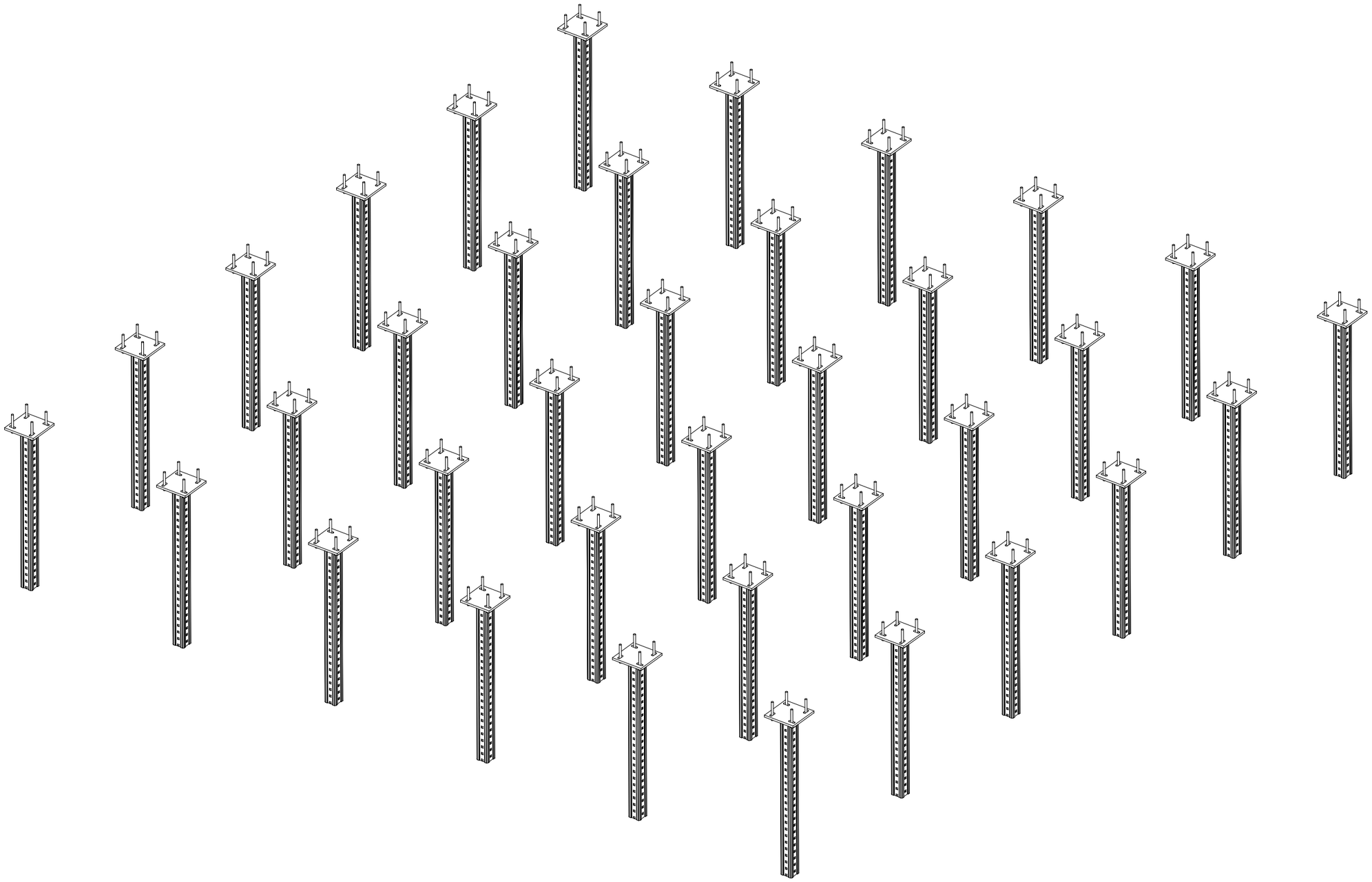

01 ISOMETRIC
N.T.S.

All loading and design criteria supplied by customer is assumed accurate. Only the stated Design Assumptions were considered, and must be verified by the responsible Engineer of Record (EOR). The basis of Hilti component and connection design is the published data in the current Hilti Technical Guide, including material and cross-section properties, allowable load values, factors of safety, methods of calculation, and limiting factors. The EOR must verify suitability for any specific application, and the capacity of the supportive structure to receive the shown configuration and associated reaction loads. Modification to components and/or design may alter performance and must be evaluated by the EOR.

TYPICAL DETAIL TYPE:

OVERHEAD GRID

TYPICAL DETAIL DESCRIPTION:

MEDICAL

DESIGNED BY:	REVIEWED BY:
MES	
DRAWN BY:	ISSUE DATE:
MJR	25 FEB 15

REVISIONS:

NO:	DESCRIPTION:	DATE:
A	ORIGINAL ISSUE	25 FEB 15

TYPICAL DETAIL NOMENCLATURE:

OHG-MED01-C

DRAWING NUMBER:	SHEET:
01	4/6

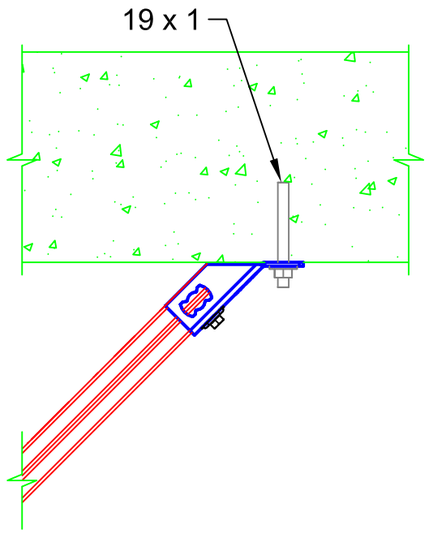

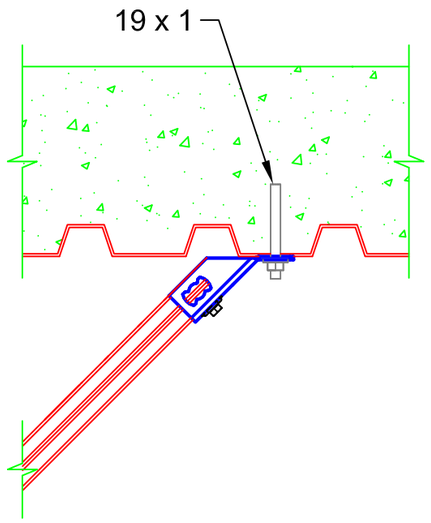

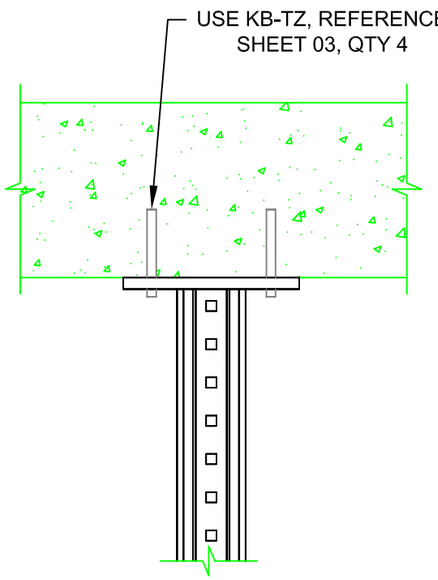

01 FLAT SLAB
N.T.S.

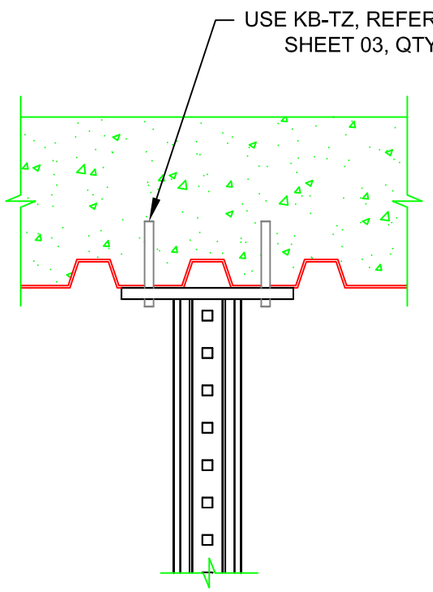

03 METAL DECK
N.T.S.

All loading and design criteria supplied by customer is assumed accurate. Only the stated Design Assumptions were considered, and must be verified by the responsible Engineer of Record (EOR). The basis of Hilti component and connection design is the published data in the current Hilti Technical Guide, including material and cross-section properties, allowable load values, factors of safety, methods of calculation, and limiting factors. The EOR must verify suitability for any specific application, and the capacity of the supportive structure to receive the shown configuration and associated reaction loads. Modification to components and/or design may alter performance and must be evaluated by the EOR.

TYPICAL DETAIL TYPE:

OVERHEAD GRID

TYPICAL DETAIL DESCRIPTION:

MEDICAL

DESIGNED BY:	REVIEWED BY:
MES	
DRAWN BY:	ISSUE DATE:
MJR	25 FEB 15

REVISIONS:

NO:	DESCRIPTION:	DATE:
A	ORIGINAL ISSUE	25 FEB 15

TYPICAL DETAIL NOMENCLATURE:

OHG-MED01-C

DRAWING NUMBER:	SHEET:
01	5/6

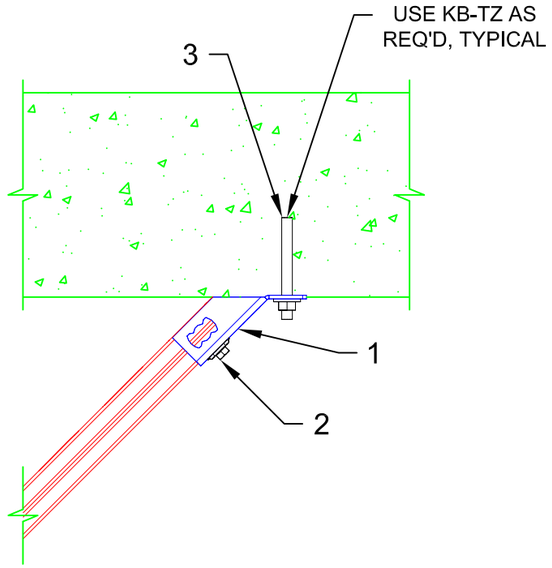

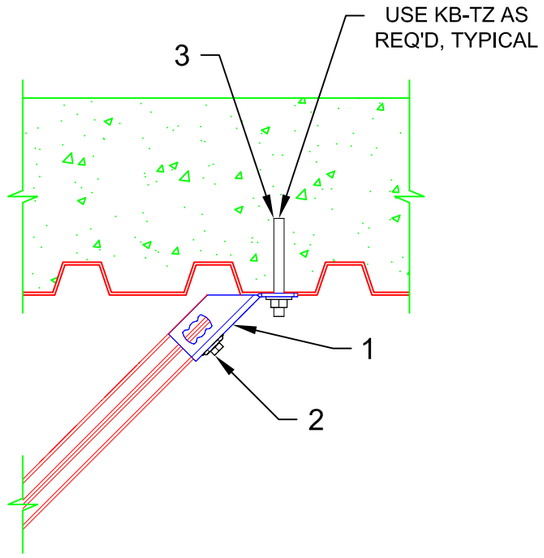

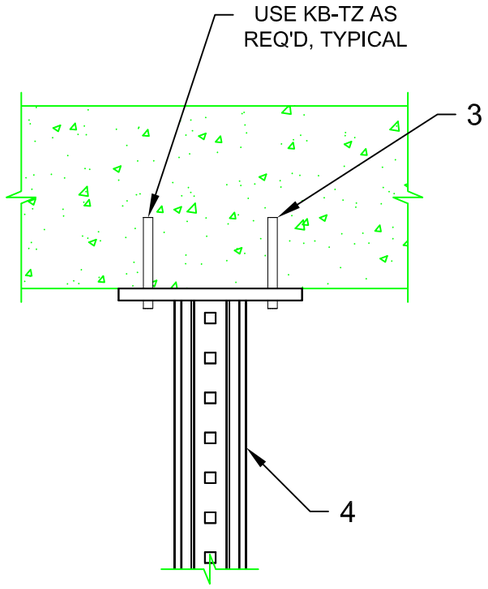

01 FLAT SLAB
N.T.S.

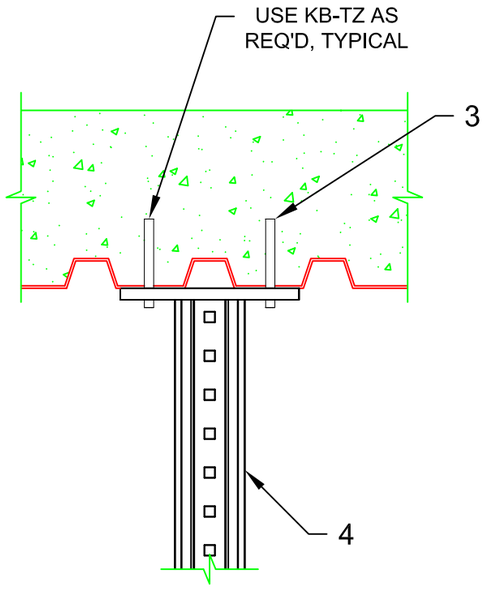

03 METAL DECK
N.T.S.

No.	Unit Qty	Unit	Description	Box Qty	# Boxes Needed	Item No.
1	AS REQ'D	EA	RAIL SUPPORT MQP-45	10	AS REQ'D	369649
2	AS REQ'D	EA	CHANNEL CONNECTOR MQN	50	AS REQ'D	369623
3	AS REQ'D	EA	USE KB3 OR KB-TZ AS APPROPRIATE	VARIES	VARIES	VARIES
4	AS REQ'D	EA	CONNECTOR MIC-C90-D-1000 WELDED BRACKET	1	AS REQ'D	267791

All loading and design criteria supplied by customer is assumed accurate. Only the stated Design Assumptions were considered, and must be verified by the responsible Engineer of Record (EOR). The basis of Hilti component and connection design is the published data in the current Hilti Technical Guide, including material and cross-section properties, allowable load values, factors of safety, methods of calculation, and limiting factors. The EOR must verify suitability for any specific application, and the capacity of the supportive structure to receive the shown configuration and associated reaction loads. Modification to components and/or design may alter performance and must be evaluated by the EOR.

TYPICAL DETAIL TYPE:

OVERHEAD GRID

TYPICAL DETAIL DESCRIPTION:

MEDICAL

DESIGNED BY: MES

REVIEWED BY:

DRAWN BY: MJR

ISSUE DATE: 25 FEB 15

REVISIONS:

NO:	DESCRIPTION:	DATE:
A	ORIGINAL ISSUE	25 FEB 15

TYPICAL DETAIL NOMENCLATURE:

OHG-MED01-C

DRAWING NUMBER: 01

SHEET: 6/6