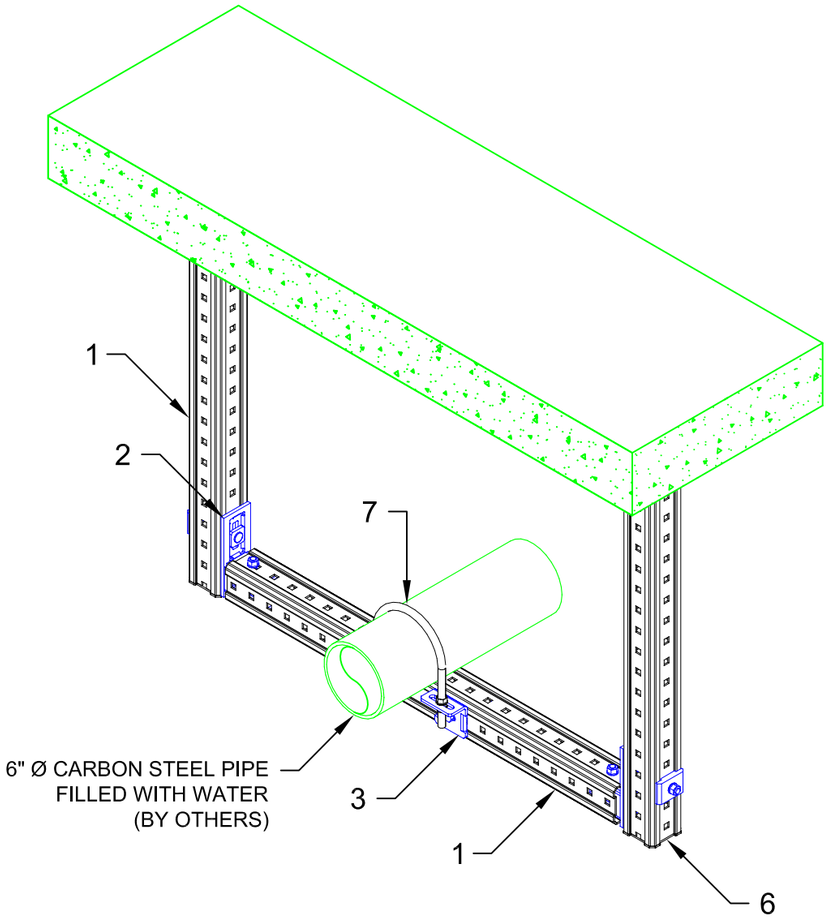


ELEV. 02
SHEET 1/1

01 ISOMETRIC
N.T.S.

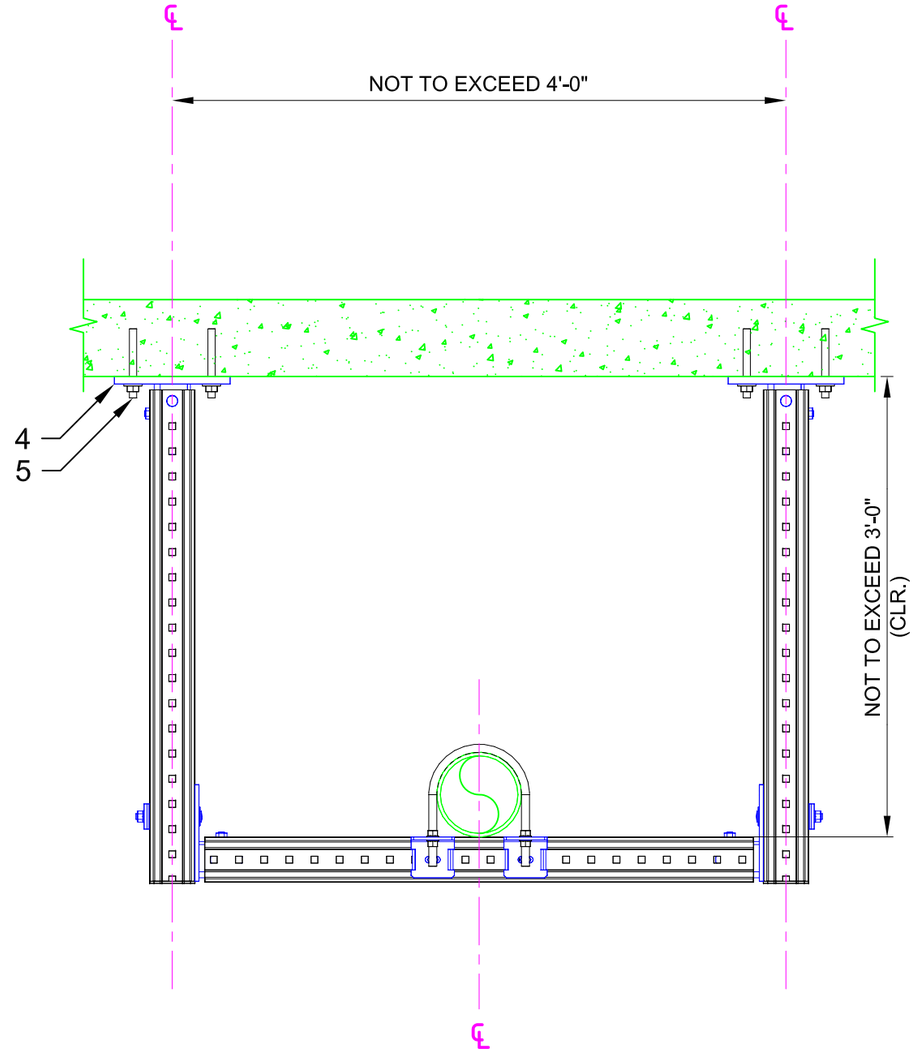


02 ELEVATION
N.T.S.

| No. | Unit Qty | Unit | Description | Box Qty | # Boxes Needed | Item No. |
|---|---|---|---|---|---|---|
| 1 | AS REQ'D | EA | GIRDER MI-90 3M | 1 | AS REQ'D | 304798 |
| 2 | 2 | EA | CONNECTOR MIC-90-U | 4 | 1 | 304803 |
| 3 | 1 | PR | CONNECTOR U-BOLT MIC-UB90-M16 | 6 | 1 | 304834 |
| 4 | 2 | EA | CONNECTOR MIC-C90-D CONCRETE | 2 | 1 | 304827 |
| 5 | 8 | EA | USE KB-TZ OR HDA AS APPROPRIATE | VARIES | VARIES | VARIES |
| 6 | 2 | EA | GIRDER END CAP MIA-EC90 | 25 | 1 | 432077 |
| 7 | 1 | EA | U-BOLT FOR 6" PIPE, 5/8" MAX DIAMETER | SPECIAL | SPECIAL | SPECIAL |

NOTE(S):
1. PRELIMINARY NOT FOR CONSTRUCTION
2. DESIGN ASSUMPTIONS:
   a. DESIGN LOADS (STATIC, U.N.O.):
      DL: SCH. 40 PIPE FILLED WITH WATER
   b. LATERAL LOADS NOT CONSIDERED
   c. BUILDING CODE: NOT SPECIFIED
   d. CORROSION RESISTANCE REQD.: NOT SPECIFIED
   e. MAX. SUPPORT SPACING = 10'-0"
3. ALL LOADS ASSUMED TO ACT AT CENTER OF PIPE(S), U.N.O.
4. REFER TO COMPONENT MANUFACTURER'S IFUs FOR REQUIRED INSTALLATION INFO.
5. E.O.R. MUST BE NOTIFIED OF ANY DEVIATIONS FROM EXISTING/ NEW SUBSTRATE CONDITIONS SHOWN HEREIN TO VALIDATE ACCEPTANCE OF THIS HILTI DESIGN PRIOR TO INSTALLATION.

All loading and design criteria supplied by customer is assumed accurate. Only the stated Design Assumptions were considered, and must be verified by the responsible Engineer of Record (EOR). The basis of Hilti component and connection design is the published data in the current Hilti Technical Guide, including material and cross-section properties, allowable load values, factors of safety, methods of calculation, and limiting factors. The EOR must verify suitability for any specific application, and the capacity of the supportive structure to receive the shown configuration and associated reaction loads. Modification to components and/or design may alter performance and must be evaluated by the EOR.

TYPICAL DETAIL TYPE:

PIPE SUPPORT

TYPICAL DETAIL DESCRIPTION:

TRAPEZE - SINGLE

DESIGNED BY: KL

REVIEWED BY: AJV

DRAWN BY: HAM

ISSUE DATE: 03 DEC 14

REVISIONS:

| NO: | DESCRIPTION: | DATE: |
|---|---|---|
| A | ORIGINAL ISSUE | 03 DEC 14 |

TYPICAL DETAIL NOMENCLATURE:

P-TR01-C

DRAWING NUMBER: 01

SHEET: 1/1

\\hilti.com\us\TEAMS\Installations\Projects\TYPICALS\TYPICAL LIBRARY\PIPING (P)\CAD\P-TR01-C.dwg, 12/29/2014 12:26:19 PM