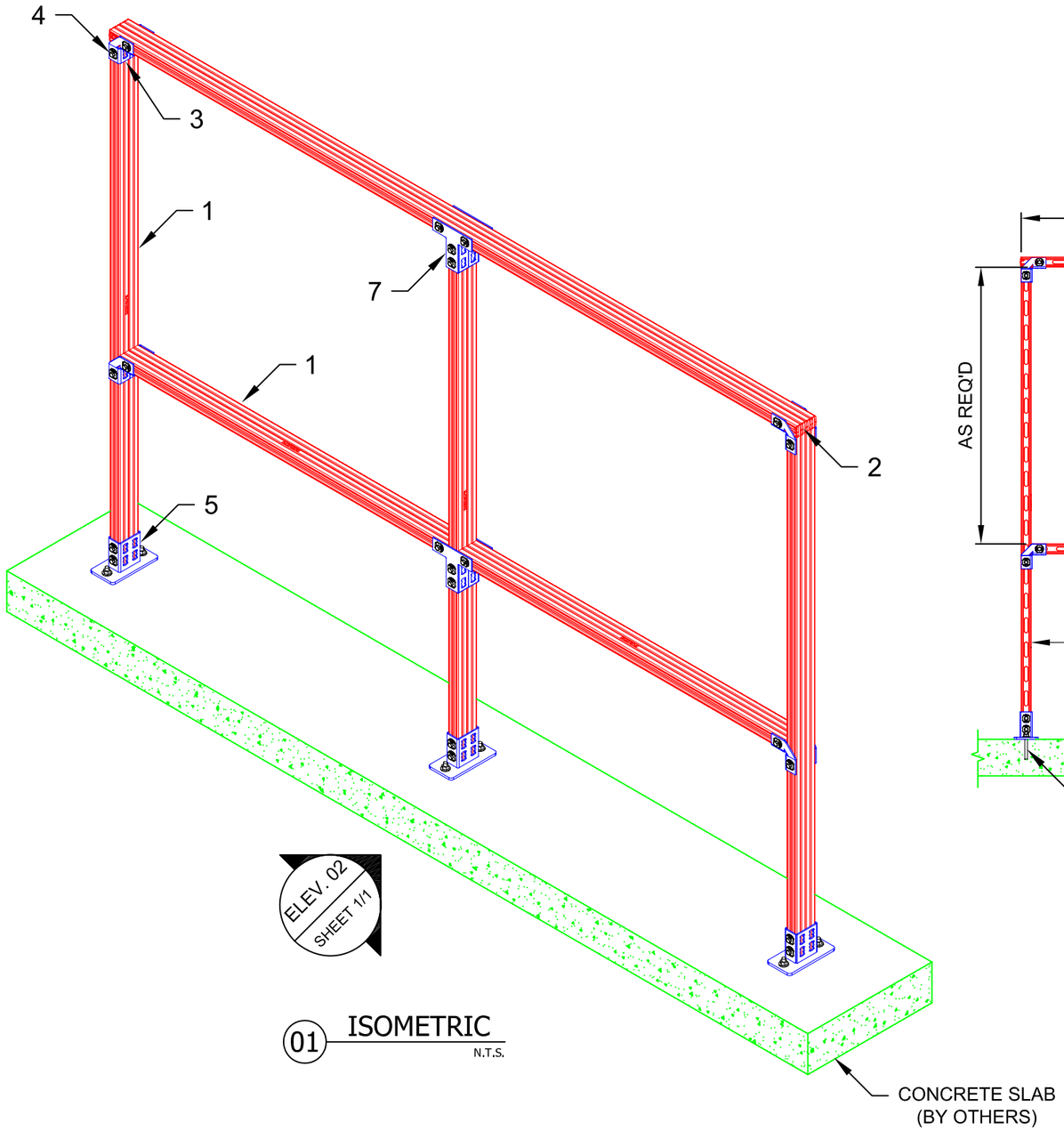

01 ISOMETRIC
N.T.S.

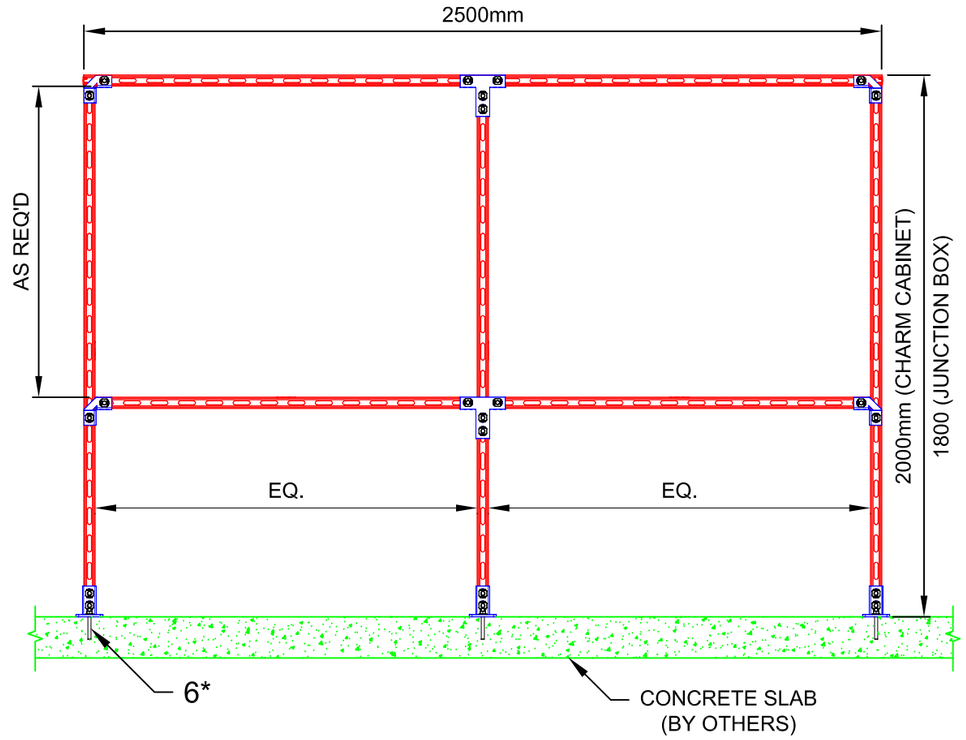

02 ELEVATION
N.T.S.

*ATTACHMENT TO SURFACE VARIES. ATTACHMENT FOR CONCRETE BASE SHOWN.

No.	Unit Qty	Unit	Description	Box Qty	# Boxes Needed	Item No.
1	AS REQ'D	EA	STRUT HS-158-12/PG 10' B2B	1	AS REQ'D	2007082
2	8	EA	CHANNEL END CAP MEK RED	50	1	244886
3	8	EA	4-HOLE ANGLE MQW-4	10	1	369658
4	44	EA	CHANNEL CONNECTOR MQN	50	1	369623
5	3	EA	RAIL SUPPORT MQP-82	8	1	369652
6	AS REQ'D	EA	USE KB3 OR KB-TZ AS APPROPRIATE	VARIES	VARIES	VARIES
7	4	EA	CHANNEL TIE MQV-3/2 D	10	1	369640

NOTE(S):
1. PRELIMINARY NOT FOR CONSTRUCTION
2. DESIGN ASSUMPTIONS:
   a. NO LOADS CONSIDERED - CONCEPT ONLY
   b. LATERAL LOADS NOT CONSIDERED
   c. BUILDING CODE: NBC
   d. CORROSION RESISTANCE REQD.: EG
   e. MAX. SUPPORT SPACING = T.B.D.
2. REFER TO COMPONENT MANUFACTURER'S IFUs FOR REQUIRED INSTALLATION INFO.

All loading and design criteria supplied by customer is assumed accurate. Only the stated Design Assumptions were considered, and must be verified by the responsible Engineer of Record (EOR). The basis of Hilti component and connection design is the published data in the current Hilti Technical Guide, including material and cross-section properties, allowable load values, factors of safety, methods of calculation, and limiting factors. The EOR must verify suitability for any specific application, and the capacity of the supportive structure to receive the shown configuration and associated reaction loads. Modification to components and/or design may alter performance and must be evaluated by the EOR.

TYPICAL DETAIL TYPE:

ELECTRICAL & INSTRUMENTATION APPLICATION

TYPICAL DETAIL DESCRIPTION:

PANEL STAND

DESIGNED BY:	REVIEWED BY:
KL	AJV
DRAWN BY:	ISSUE DATE:
GAB	04 DEC 14

REVISIONS:

NO:	DESCRIPTION:	DATE:
A	ORIGINAL ISSUE	04 DEC 14

TYPICAL DETAIL NOMENCLATURE:

EI-PS56-C

DRAWING NUMBER:	SHEET:
01	1/1

\\hilti.com\US\TEAMS\installations\Projects\TYPICALS\TYPICAL LIBRARY\ELECTRICAL & INSTRUMENTATION (E&I)\CAD\EI-PS56-C.dwg, 12/23/2014 8:26:57 AM