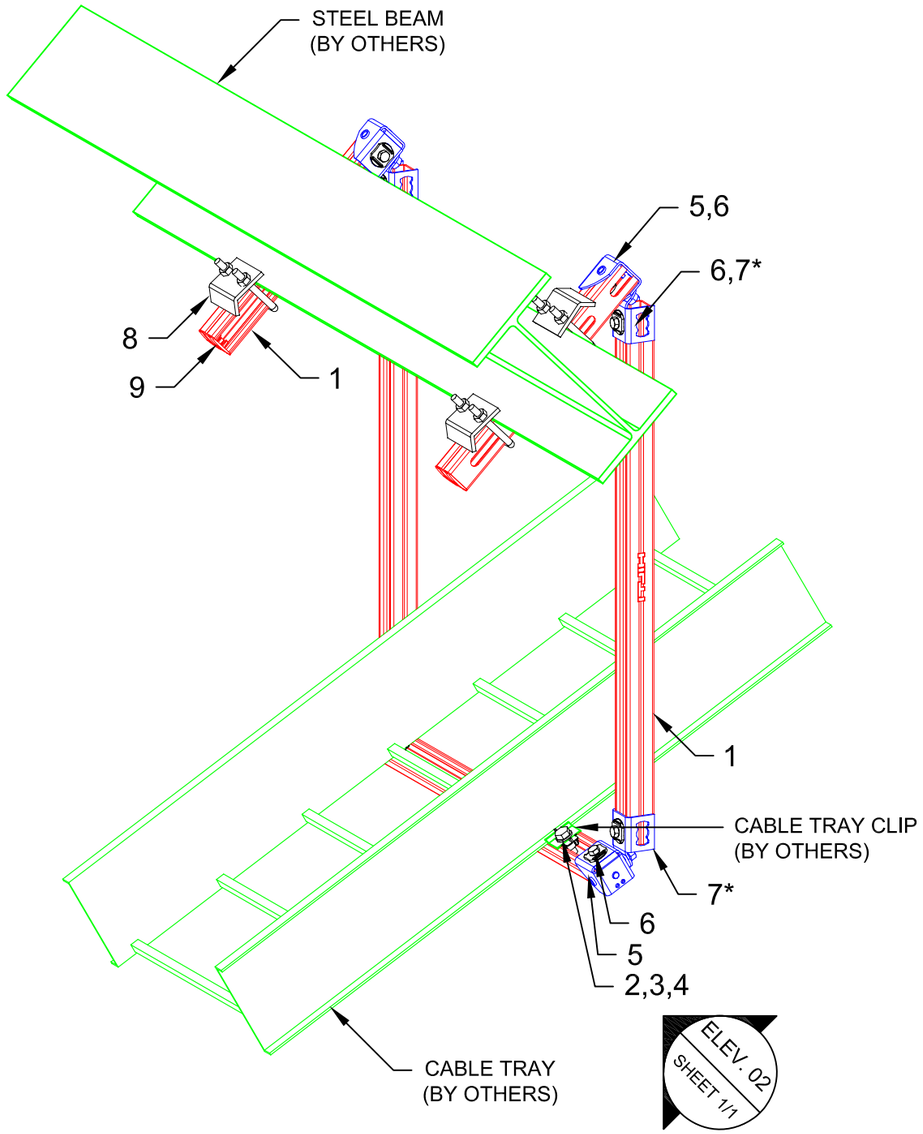

01 ISOMETRIC
N.T.S.

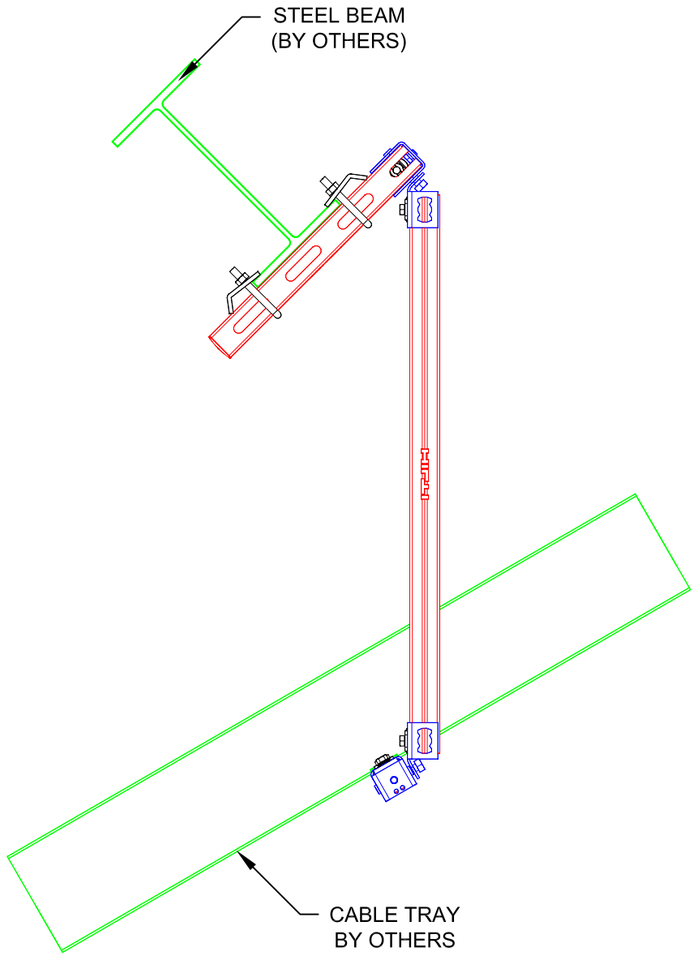

02 ELEVATION
N.T.S.

No.	Unit Qty	Unit	Description	Box Qty	# Boxes Needed	Item No.
1	AS REQ'D	EA	STRUT HS-158-12/PG 10'	1	AS REQ'D	407555
2	AS REQ'D	EA	WING NUT MQM-F3/8"	50	AS REQ'D	377882
3	AS REQ'D	EA	HEX HEAD BOLT 3/8" x 1-1/4"	100	AS REQ'D	411764
4	AS REQ'D	EA	WASHER 3/8"	200	AS REQ'D	411757
5	AS REQ'D	EA	ANGLE MQ3D-W90	20	AS REQ'D	369695
6	AS REQ'D	EA	CHANNEL CONNECTOR MQN	50	AS REQ'D	369623
7	AS REQ'D	EA	ANGLE MQ3D-W45	16	AS REQ'D	369696
8	AS REQ'D	EA	STRUT BEAM CLAMP SBC (25/BOX)	25	AS REQ'D	258316
9	AS REQ'D	EA	CHANNEL END CAP MEK RED	50	AS REQ'D	244886

NOTE(S):
1. PRELIMINARY NOT FOR CONSTRUCTION
2. *FIELD BEND ONCE AS REQUIRED
3. **MATERIAL THICKNESS IN STEEL BASE ≥ 5/16". MINIMUM EDGE DISTANCE AND MINIMUM SPACING ARE 1/4" AND 5/8" RESPECTIVELY.
4. DESIGN ASSUMPTIONS:
   a. NO LOADS CONSIDERED - CONCEPT ONLY
   b. LATERAL LOADS NOT CONSIDERED
   c. BUILDING CODE: NOT SPECIFIED
   d. CORROSION RESISTANCE REQD.: NOT SPECIFIED
2. REFER TO COMPONENT MANUFACTURER'S IFUs FOR REQUIRED INSTALLATION INFO.
3. E.O.R. MUST BE NOTIFIED OF ANY DEVIATIONS FROM EXISTING/ NEW SUBSTRATE CONDITIONS SHOWN HEREIN TO VALIDATE ACCEPTANCE OF THIS HILTI DESIGN PRIOR TO INSTALLATION.

All loading and design criteria supplied by customer is assumed accurate. Only the stated Design Assumptions were considered, and must be verified by the responsible Engineer of Record (EOR). The basis of Hilti component and connection design is the published data in the current Hilti Technical Guide, including material and cross-section properties, allowable load values, factors of safety, methods of calculation, and limiting factors. The EOR must verify suitability for any specific application, and the capacity of the supportive structure to receive the shown configuration and associated reaction loads. Modification to components and/or design may alter performance and must be evaluated by the EOR.

TYPICAL DETAIL TYPE:

CABLE TRAY SUPPORT

TYPICAL DETAIL DESCRIPTION:

TRAPEZE - ANGLED

DESIGNED BY:	REVIEWED BY:
KL	AJV
DRAWN BY:	ISSUE DATE:
GAB	02 JAN 15

REVISIONS:

NO:	DESCRIPTION:	DATE:
A	ORIGINAL ISSUE	02 JAN 15

TYPICAL DETAIL NOMENCLATURE:

CT-TR60-S

DRAWING NUMBER:	SHEET:
01	1/1

\\hilti.com\US\TEAMS\installations\Projects\TYPICALS\TYPICAL LIBRARY\CABLE TRAY (CT)\CAD\CT-TR60-S.dwg, 1/2/2015 1:35:07 PM