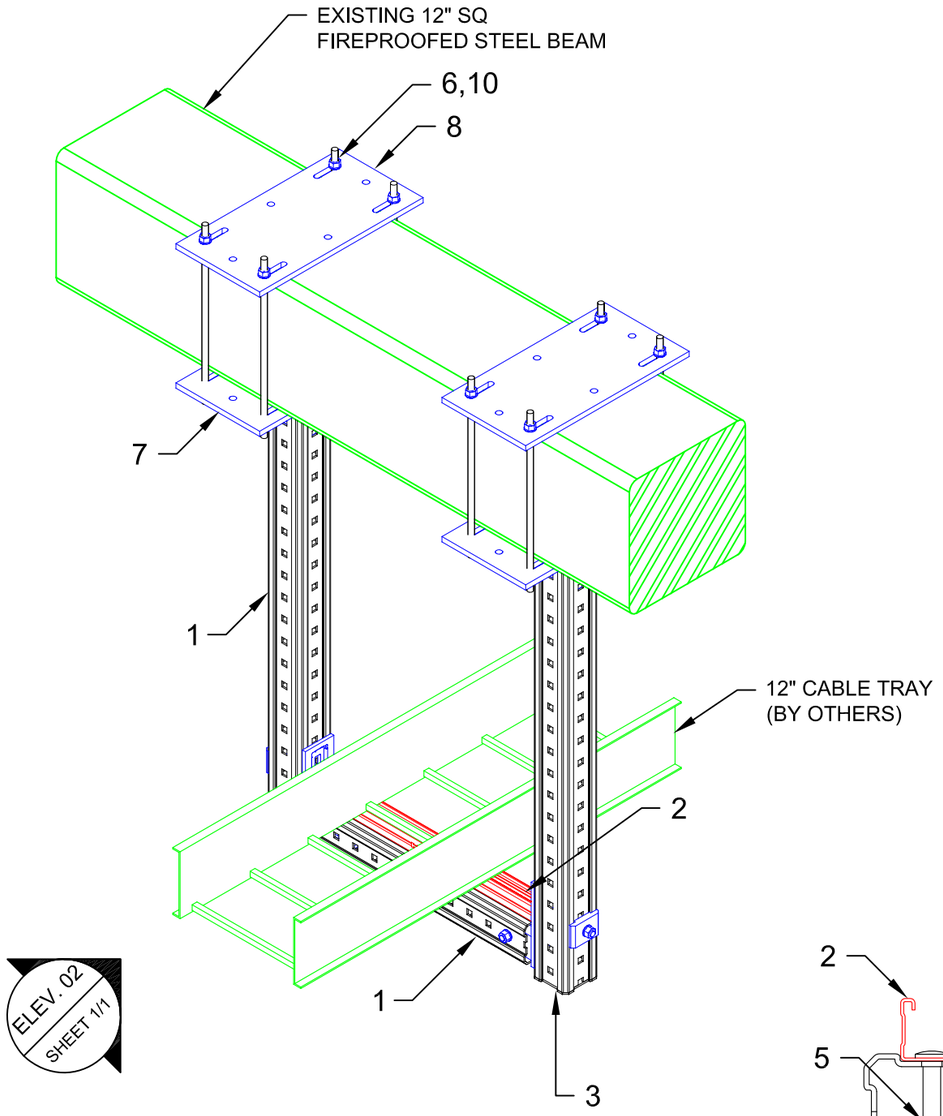

01 ISOMETRIC
N.T.S.

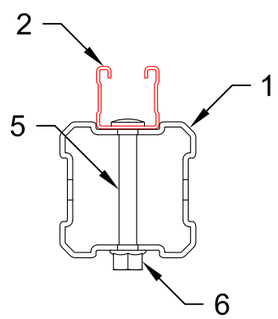

03 SECTION
N.T.S.

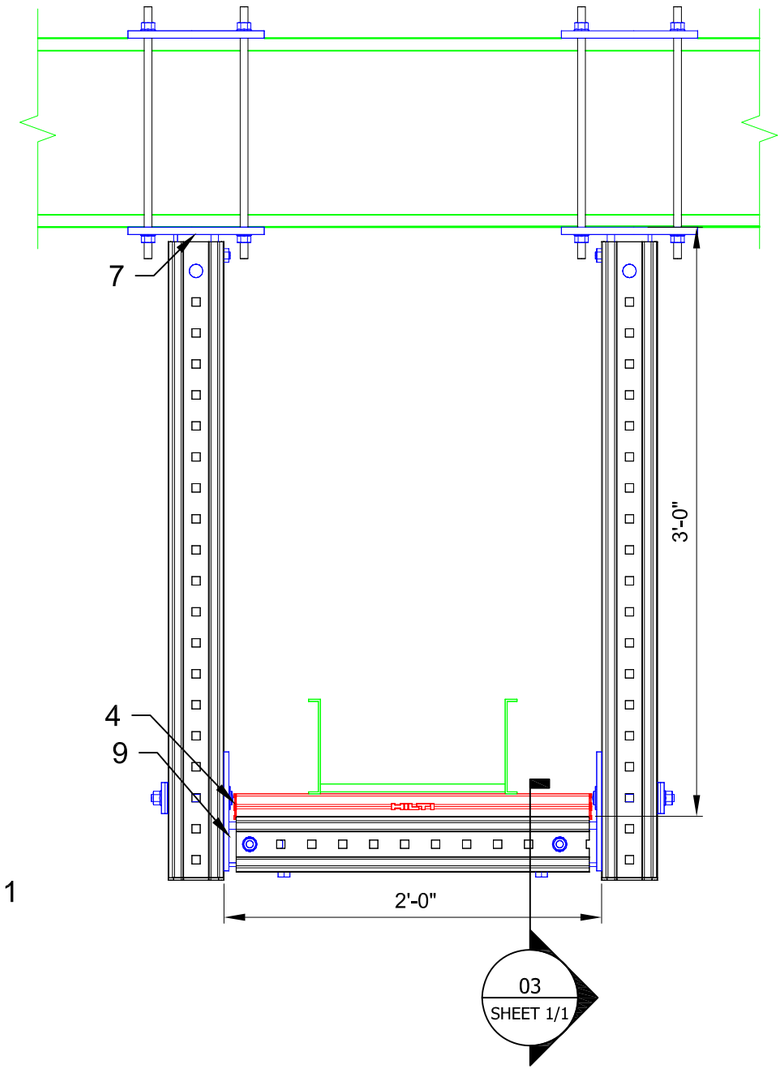

02 ELEVATION
N.T.S.

No.	Unit Qty	Unit	Description	Box Qty	# Boxes Needed	Item No.
1	AS REQ'D	EA	GIRDER MI-90 3M	1	AS REQ'D	304798
2	AS REQ'D	EA	STRUT HS-158-12/PG 10'	1	AS REQ'D	407555
3	2	EA	GIRDER END CAP MIA-EC90	25	1	432077
4	4	EA	CHANNEL END CAP MEK RED	50	1	244886
5	2	EA	ONEHAND SCREW MIA-OH90	10	1	304889
6	18	EA	MI HEX NUT M12-F-SL-WS 3/4"	100	1	382897
7	2	EA	CONNECTOR MIC-S90-C STEEL	2	1	304814
8	2	EA	BASEPLATE MIB-SC STEEL	2	1	304823
9	2	EA	CONNECTOR MIC-90-U	4	1	304803
10	4	EA	THREADED STUD Grade 8.8 M12X1000-F (3.28 ft)	15	1	304774

NOTE(S):

1. PRELIMINARY NOT FOR CONSTRUCTION
2. DESIGN ASSUMPTIONS:
   a. DESIGN LOADS (STATIC, U.N.O.):
      DL: MAX. 1,350 lbs.
      WL: MAX. 350 lbs. (LONGITUDINAL)
      EQ: MAX. 270 lbs. (TRANSVERSE)
   b. BUILDING CODE: NOT SPECIFIED
   c. CORROSION RESISTANCE REQD.: HDG / EG
   d. MAX. SUPPORT SPACING = REFER TO CONSTRUCTION PLANS
2. REFER TO COMPONENT MANUFACTURER'S IFUs FOR REQUIRED INSTALLATION INFO.
3. E.O.R. MUST BE NOTIFIED OF ANY DEVIATIONS FROM EXISTING/ NEW SUBSTRATE CONDITIONS SHOWN HEREIN TO VALIDATE ACCEPTANCE OF THIS HILTI DESIGN PRIOR TO INSTALLATION.
4. FIELD TO VERIFY ALL DIMENSIONS AND EXISTING BEAM SIZES AND ELEVATIOS.

All loading and design criteria supplied by customer is assumed accurate. Only the stated Design Assumptions were considered, and must be verified by the responsible Engineer of Record (EOR). The basis of Hilti component and connection design is the published data in the current Hilti Technical Guide, including material and cross-section properties, allowable load values, factors of safety, methods of calculation, and limiting factors. The EOR must verify suitability for any specific application, and the capacity of the supportive structure to receive the shown configuration and associated reaction loads. Modification to components and/or design may alter performance and must be evaluated by the EOR.

TYPICAL DETAIL TYPE:

CABLE TRAY SUPPORT

TYPICAL DETAIL DESCRIPTION:

TRAPEZE - SINGLE

DESIGNED BY:	REVIEWED BY:
KL	AJV
DRAWN BY:	ISSUE DATE:
GAB	02 JAN 15

REVISIONS:

NO:	DESCRIPTION:	DATE:
A	ORIGINAL ISSUE	02 JAN 15

TYPICAL DETAIL NOMENCLATURE:

CT-TR12-S

DRAWING NUMBER:	SHEET:
01	1/1