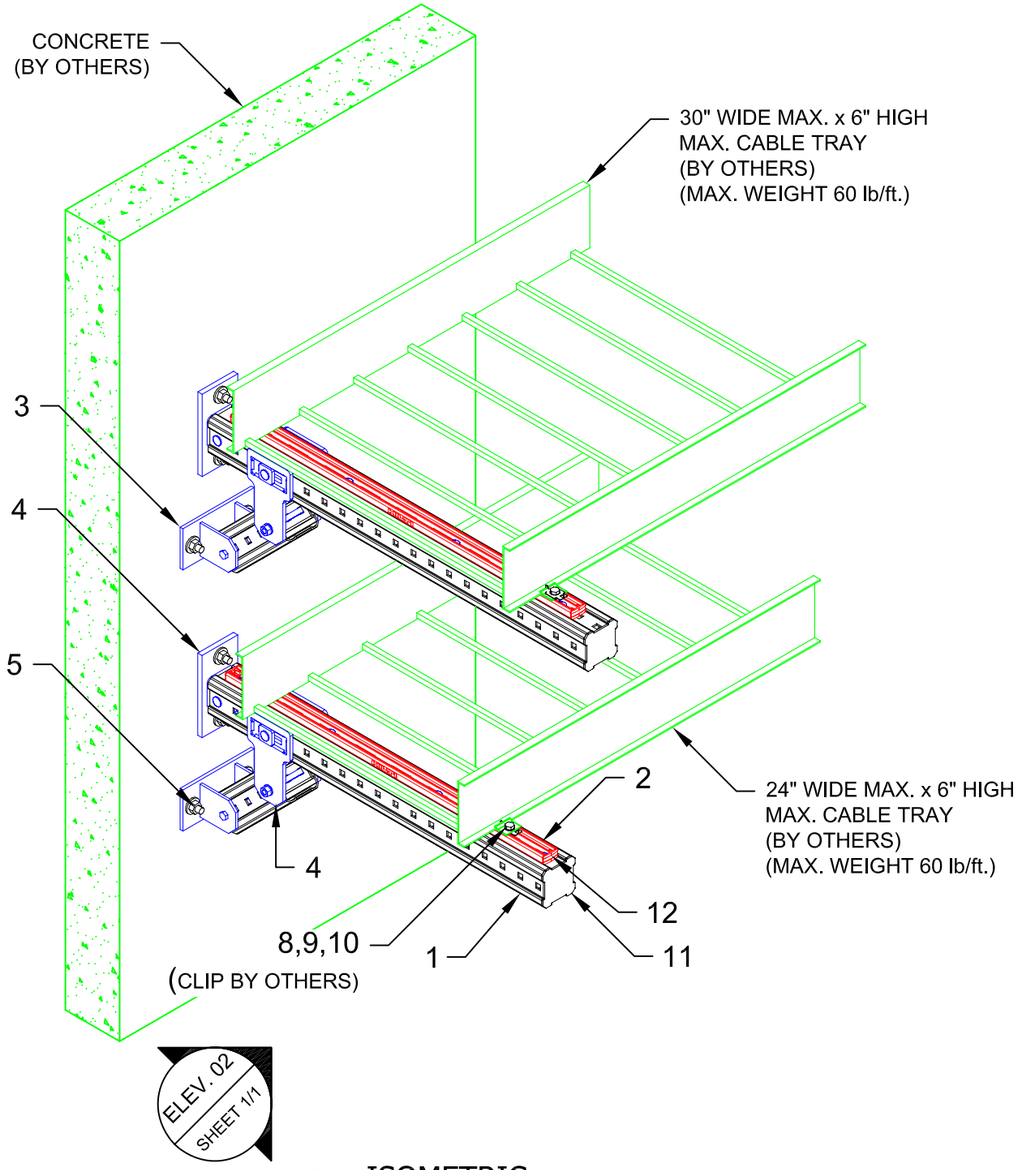

01 ISOMETRIC
N.T.S.

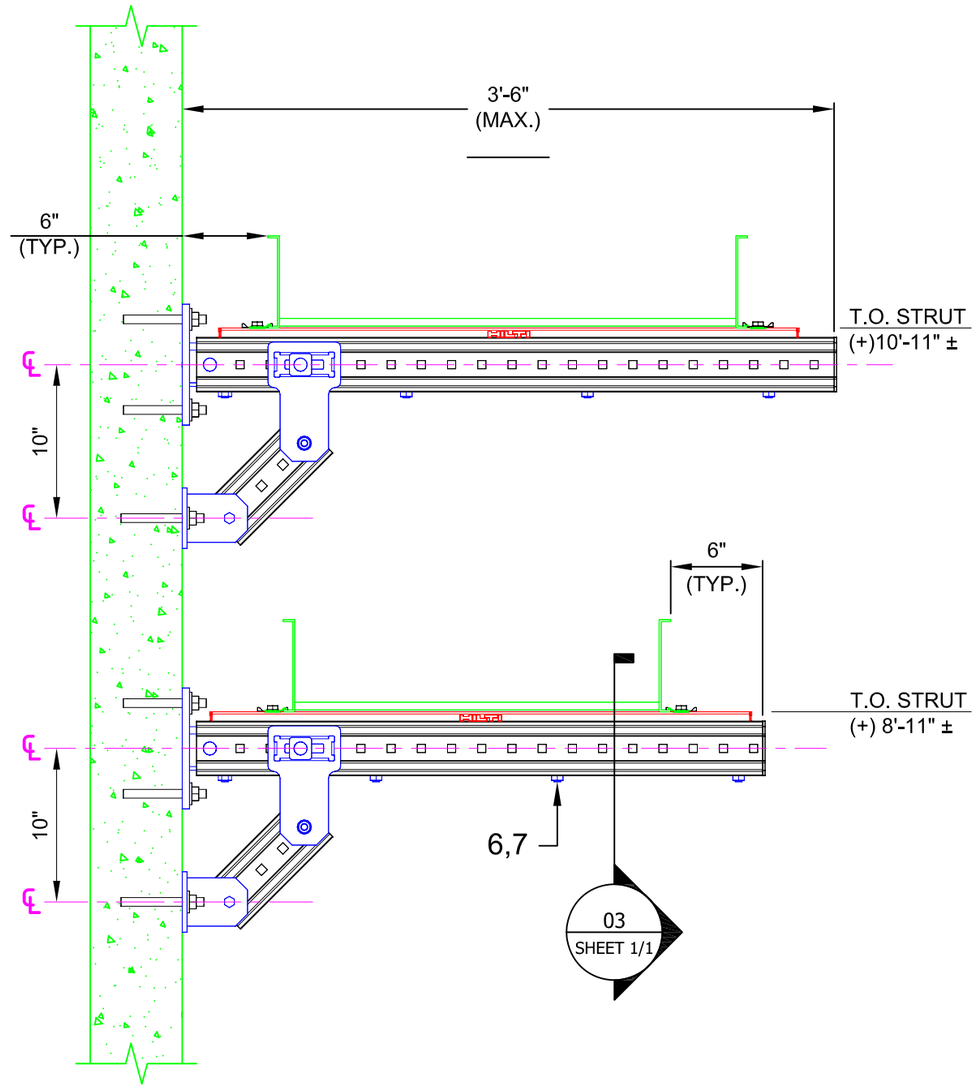

02 ELEVATION
N.T.S.

No.	Unit Qty	Unit	Description	Box Qty	# Boxes Needed	Item No.
1	AS REQ'D	EA	GIRDER MI-90 3M	1	AS REQ'D	304798
2	AS REQ'D	EA	STRUT HS-1316-12/PG 10'	1	AS REQ'D	407543
3	2	EA	CONNECTOR MIC-CU-MA CONCRETE	4	1	304828
4	2	EA	CONNECTOR MIC-C90-AA CONCRETE	2	1	304825
5	8	EA	USE KB3 OR KB-TZ AS APPROPRIATE	VARIES	VARIES	VARIES
6	6	EA	ONEHAND SCREW MIA-OH90	10	1	304889
7	6	EA	PREVAIL TORQUE HEX NUT M12-F-SL-WS 3/4"	100	1	382897
8	4	EA	WING NUT MQM-F3/8"	50	1	377882
9	4	EA	WASHER-USS 3/8"	200	1	411757
10	4	EA	HEX HEAD BOLT 3/8"-11/4" 100/BOX	100	1	411764
11	4	EA	GIRDER END CAP MIA-EC90	25	1	432077
12	2	EA	CHANNEL END CAP MEK RED	50	1	244886

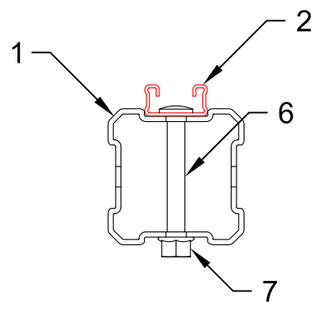

03 SECTION
N.T.S.

NOTE(S):
1. PRELIMINARY NOT FOR CONSTRUCTION
2. DESIGN LOADS:
   DL: 60 lb./ft. PER CABLE TRAY
   WL: 8 psf. (INTERNAL WIND PRESSURE)
3. REFER TO APPROPRIATE IFUs FOR RECOMMENDED INSTALLATION INFO.
4. MAX. SUPPORT SPACING = 8'-10"
5. ADEQUACY OF CONCRETE BY OTHERS, NOT VERIFIED BY HILTI.
6. UNIT WEIGHT OF FRAMING AS FOLLOWS:
   a. MI-90: 6.34 lb/ft
   b. STRUT HS-1316-12/PG: 1.287 lb/ft

All loading and design criteria supplied by customer is assumed accurate. Only the stated Design Assumptions were considered, and must be verified by the responsible Engineer of Record (EOR). The basis of Hilti component and connection design is the published data in the current Hilti Technical Guide, including material and cross-section properties, allowable load values, factors of safety, methods of calculation, and limiting factors. The EOR must verify suitability for any specific application, and the capacity of the supportive structure to receive the shown configuration and associated reaction loads. Modification to components and/or design may alter performance and must be evaluated by the EOR.

TYPICAL DETAIL TYPE:
CABLE TRAY SUPPORT

TYPICAL DETAIL DESCRIPTION:
CANTILEVER - DOUBLE

DESIGNED BY: KL
REVIEWED BY: AJV
DRAWN BY: HAM
ISSUE DATE: 12 DEC 14

REVISIONS:

NO:	DESCRIPTION:	DATE:
A	ORIGINAL ISSUE	12 DEC 14

TYPICAL DETAIL NOMENCLATURE:
CT-C11-C

DRAWING NUMBER: 01
SHEET: 1/1

\\hilti.com\US\TEAMS\installations\Projects\TYPICALS\TYPICAL LIBRARY\CABLE TRAY (CT)\CAD\CT-C11-C.dwg, 12/31/2014 11:00:15 AM