MARK	ITEM NO.	DESCRIPTION	QTY.
1	2268365	MT-70 L OC	1
2	2272101	MT-B-GS O4U OC	1
3	387527	ANCHOR KB-TZ 1/2" x 4-1/2" SS304	4
4	2272084	MT-TFB OC	6
5	2273697	MT-EC-70	1

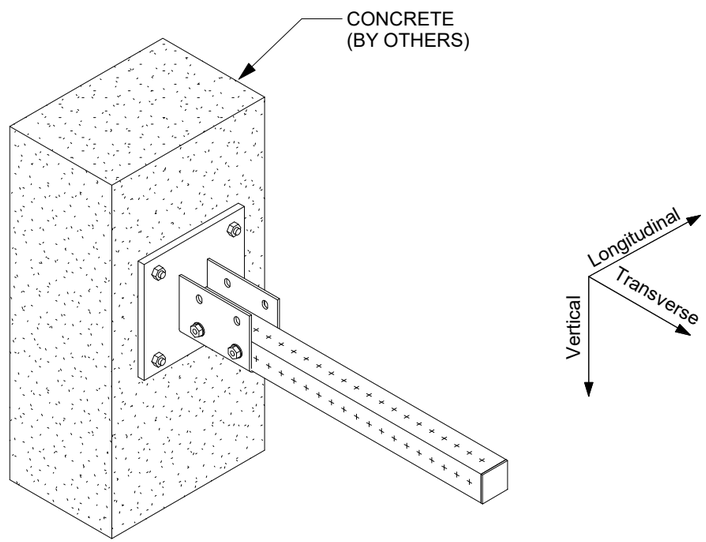

1 ISOMETRIC
N.T.S.

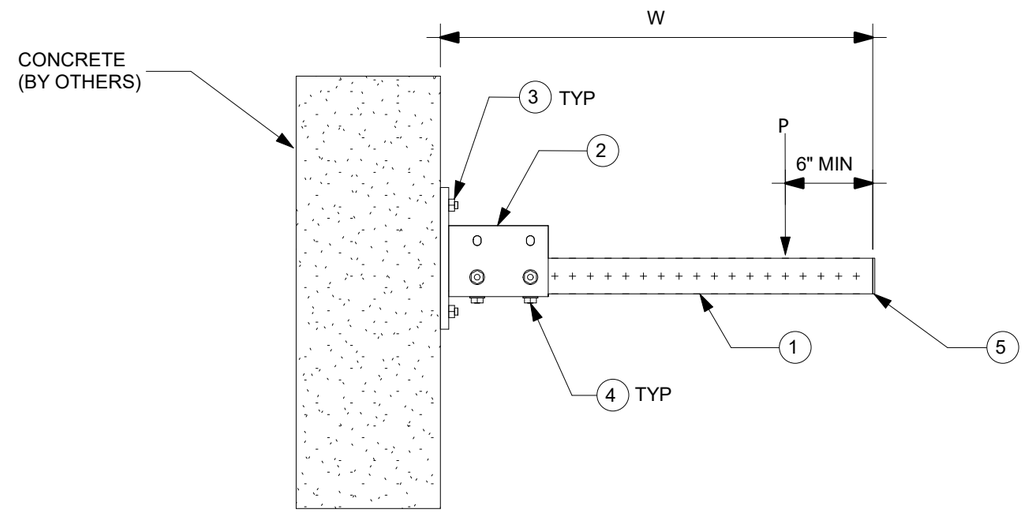

2 ELEVATION
N.T.S.

NOTE(S):

A. THE TYPICAL SUPPORT IS LOAD RATED AND DIMENSIONALLY LIMITED BASED ON DESIGN METHODOLOGY AND GENERIC NON-PROJECT SPECIFIC ASSUMPTIONS SET FORTH IN PROFIS MODULAR SUPPORTS ENGINEERING SOFTWARE. THE ENGINEER OF RECORD SHALL EVALUATE THIS TYPICAL SUPPORT TO DETERMINE ITS SUITABILITY FOR THE ACTUAL PROJECT SPECIFIC DESIGN CRITERIA AND REQUIREMENTS.

B. THE EVALUATION OF EXISTING STRUCTURE IS OUTSIDE OF THE TYPICAL DESIGN SCOPE AND SHALL BE PERFORMED BY THE ENGINEER OF RECORD.

C. TYPICAL SUPPORT DESIGN IS BASED ON INTERNATIONAL BUILDING CODE (IBC) 2018. SEE TABLE-A FOR ALLOWABLE STRENGTH DESIGN LOADS (STATIC U.N.O.); GOVERNING LATERAL LOADS NOTED IN THE ALLOWABLE LOAD TABLE IS MAXIMUM OF 30% OF DEAD LOAD.

D. ALL LOADS ASSUMED TO ACT ON THE SUPPORT, NO ECCENTRICITY CONSIDERED

E. MAXIMUM ALLOWABLE LOADS NOTED IN TABLE-A ARE BASED ON THE GOVERNING COMBINATION OF VERTICAL LOAD WITH TRANSVERSE LOAD OR VERTICAL LOAD WITH LONGITUDINAL LOAD. A SEPARATE ANALYSIS MUST BE PERFORMED WHEN TRANSVERSE AND LONGITUDINAL LOAD OCCURS SIMULTANEOUSLY.

F. REFER TO HILTI INSTRUCTION FOR USE SHEET FOR REQUIRED INSTALLATION INFORMATION.

G. USE ½" DIA. HILT KWIK BOLT-TZ WITH MIN 3-5/8" EFFECTIVE EMBEDMENT. INSTALL ANCHOR PER ESR-1917 AND HILTI'S INSTRUCTIONS FOR USE AND RECOMMENDATIONS. MIN. CONCRETE COMPRESSIVE STRENGTH F'C= 3000 PSI, MIN. CONCRETE EDGE DISTANCE = 6", AND MIN. CONCRETE THICKNESS 6".

H. CONCRETE ANCHORS NOTED IN THE BILL OF MATERIAL ARE DESIGNED ONLY FOR WIND LATERAL LOADING. ENGINEER OF RECORD TO VERIFY ADEQUACY OF ANCHOR WHEN TYPICAL IS BEING USED FOR SEISMIC LATERAL LOADING.

TABLE A

	Max W, in	18	24
ALLOWABLE LOADS, lbs	Vertical (P)	725	475
	Transverse	218	142
	Longitudinal	218	142

All loading and design criteria supplied by customer is assumed accurate. Only the stated Design Assumptions were considered, and must be verified by the responsible Engineer of Record (EOR). The basis of Hilti component and connection design is the published data in the current Hilti Technical Guide, including material and cross-section properties, allowable load values, factors of safety, methods of calculation, and limiting factors. The EOR must verify suitability for any specific application, and the capacity of the supportive structure to receive the shown configuration and associated reaction loads. Modification to components and/or design may alter performance and must be evaluated by the EOR.

REVISION HISTORY

NO:	DESCRIPTION:	DATE:
A	ISSUE FOR REVIEW	12/09/2020

PROJECT NAME:
CANTILEVER MT70 C 001

PROJECT DESCRIPTION:
CANTILEVER MT70 C 001

DRAWN:	CHECKED:	DESIGNED:	REVIEWED:
GAB	IDP	JDR	BVD

PAPER SIZE: ANSI B

PROJECT NUMBER: - CT7C1 - 1

BIM 360://Hilti - MT Typicals/CT7C1.rvt

MARK	ITEM NO.	DESCRIPTION	QTY.
1	2268365	MT-70 L OC	1
2	2272101	MT-B-GS O4U OC	1
3	2194341	X-BT-MR W10/15 SN 8	4
4	2272084	MT-TFB OC	6
5	2273697	MT-EC-70	1

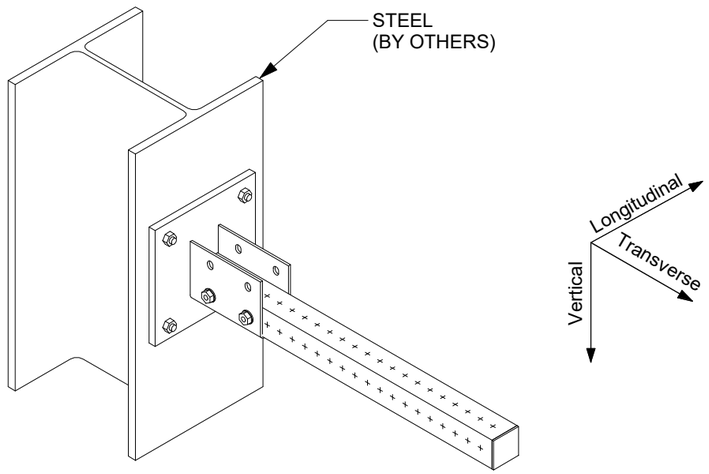

1 ISOMETRIC
N.T.S.

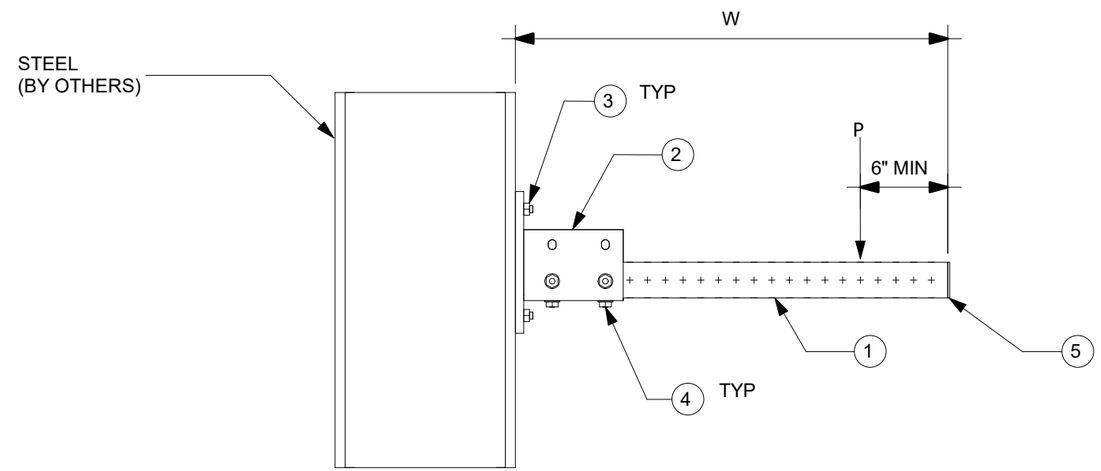

2 ELEVATION
N.T.S.

NOTE(S):

A. THE TYPICAL SUPPORT IS LOAD RATED AND DIMENSIONALLY LIMITED BASED ON DESIGN METHODOLOGY AND GENERIC NON-PROJECT SPECIFIC ASSUMPTIONS SET FORTH IN PROFIS MODULAR SUPPORTS ENGINEERING SOFTWARE. THE ENGINEER OF RECORD SHALL EVALUATE THIS TYPICAL SUPPORT TO DETERMINE ITS SUITABILITY FOR THE ACTUAL PROJECT SPECIFIC DESIGN CRITERIA AND REQUIREMENTS.

B. THE EVALUATION OF EXISTING STRUCTURE IS OUTSIDE OF THE TYPICAL DESIGN SCOPE AND SHALL BE PERFORMED BY THE ENGINEER OF RECORD.

C. TYPICAL SUPPORT DESIGN IS BASED ON INTERNATIONAL BUILDING CODE (IBC) 2018. SEE TABLE-A FOR ALLOWABLE STRENGTH DESIGN LOADS (STATIC U.N.O.); GOVERNING LATERAL LOADS NOTED IN THE ALLOWABLE LOAD TABLE IS MAXIMUM OF 30% OF DEAD LOAD.

D. ALL LOADS ASSUMED TO ACT ON THE SUPPORT, NO ECCENTRICITY CONSIDERED.

E. MAXIMUM ALLOWABLE LOADS NOTED IN TABLE-A ARE BASED ON THE GOVERNING COMBINATION OF VERTICAL LOAD WITH TRANSVERSE LOAD OR VERTICAL LOAD WITH LONGITUDINAL LOAD. A SEPARATE ANALYSIS MUST BE PERFORMED WHEN TRANSVERSE AND LONGITUDINAL LOAD OCCURS SIMULTANEOUSLY.

F. REFER TO HILTI INSTRUCTION FOR USE SHEET FOR REQUIRED INSTALLATION INFORMATION. THREAD FORMING BOLT MAY BE INSTALLED USING A TORQUE WRENCH OR SI-AT-A22 PER INSTRUCTION FOR USE.

G. X-BT REQUIREMENT: MIN. STEEL BASE MATERIAL THICKNESS SHALL BE 5/16". MIN EDGE DISTANCE SHALL BE 3/8". MIN YIELD STRENGTH OF STEEL SHALL BE FY=36KSI.

TABLE A

	Max W, in	18	24
ALLOWABLE LOADS, lbs	Vertical (P)	550	350
	Transverse	165	105
	Longitudinal	165	105

All loading and design criteria supplied by customer is assumed accurate. Only the stated Design Assumptions were considered, and must be verified by the responsible Engineer of Record (EOR). The basis of Hilti component and connection design is the published data in the current Hilti Technical Guide, including material and cross-section properties, allowable load values, factors of safety, methods of calculation, and limiting factors. The EOR must verify suitability for any specific application, and the capacity of the supportive structure to receive the shown configuration and associated reaction loads. Modification to components and/or design may alter performance and must be evaluated by the EOR.

REVISION HISTORY

NO:	DESCRIPTION:	DATE:
A	ISSUE FOR REVIEW	08/19/2020
B	ISSUE FOR REVIEW	12/14/2020

PROJECT NAME:
CANTILEVER MT70 S 001

PROJECT DESCRIPTION:
CANTILEVER MT70 S 001

DRAWN:	CHECKED:	DESIGNED:	REVIEWED:
GAB	BAP	JDR	BVD

PAPER SIZE: ANSI B

PROJECT NUMBER: PROJECT - JOB CT7S1 - SHEET 1

BIM 360://Hilti - MT Typicals/CT7S1.rvt

MARK	ITEM NO.	DESCRIPTION	QTY.
1	2268365	MT-70 L OC	1
2	2272101	MT-B-GS O4U OC	1
3	2272084	MT-TFB OC	6
4	2194341	X-BT-MR W10/15 SN 8	4
6	2273697	MT-EC-70	1

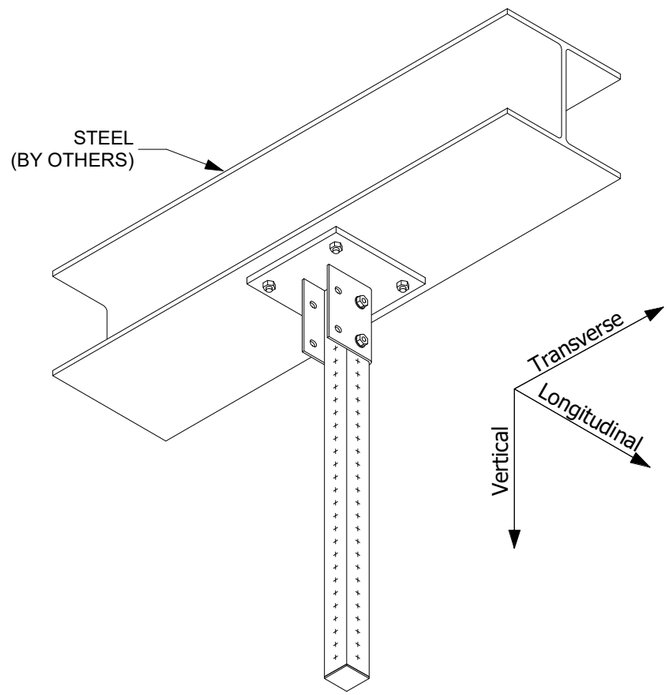

1 ISOMETRIC
N.T.S.

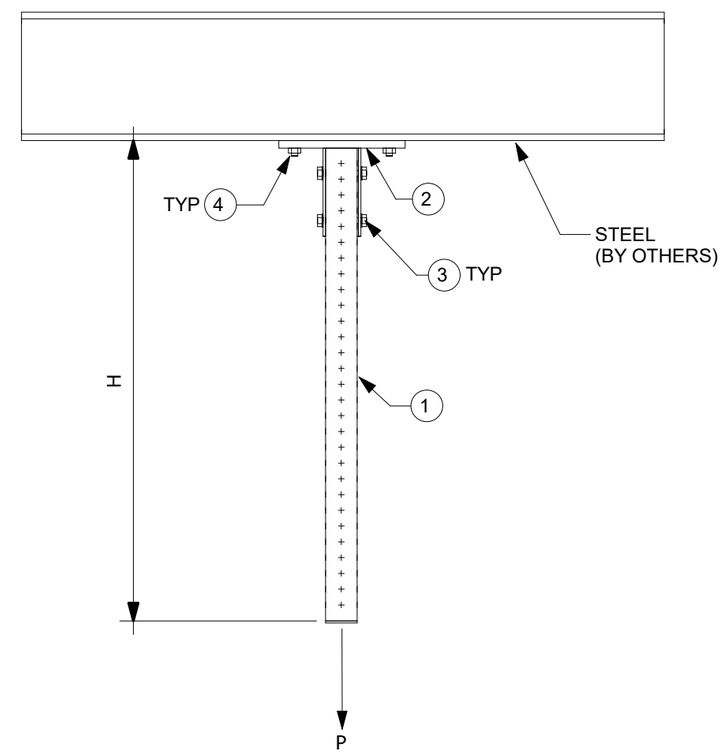

2 ELEVATION
N.T.S.

NOTE(S):

A. THE TYPICAL SUPPORT IS LOAD RATED AND DIMENSIONALLY LIMITED BASED ON DESIGN METHODOLOGY AND GENERIC NON-PROJECT SPECIFIC ASSUMPTIONS SET FORTH IN PROFIS MODULAR SUPPORTS ENGINEERING SOFTWARE. THE ENGINEER OF RECORD SHALL EVALUATE THIS TYPICAL SUPPORT TO DETERMINE ITS SUITABILITY FOR THE ACTUAL PROJECT SPECIFIC DESIGN CRITERIA AND REQUIREMENTS.

B. THE EVALUATION OF EXISTING STRUCTURE IS OUTSIDE OF THE TYPICAL DESIGN SCOPE AND SHALL BE PERFORMED BY THE ENGINEER OF RECORD.

C. TYPICAL SUPPORT DESIGN IS BASED ON INTERNATIONAL BUILDING CODE (IBC) 2018. SEE TABLE-A FOR ALLOWABLE STRENGTH DESIGN LOADS (STATIC U.N.O.); GOVERNING LATERAL LOADS NOTED IN THE ALLOWABLE LOAD TABLE IS MAXIMUM OF 30% OF DEAD LOAD.

D. ALL LOADS ASSUMED TO ACT ON THE SUPPORT, NO ECCENTRICITY CONSIDERED.

E. MAXIMUM ALLOWABLE LOADS NOTED IN TABLE-A ARE BASED ON THE GOVERNING COMBINATION OF VERTICAL LOAD WITH TRANSVERSE LOAD OR VERTICAL LOAD WITH LONGITUDINAL LOAD. A SEPARATE ANALYSIS MUST BE PERFORMED WHEN TRANSVERSE AND LONGITUDINAL LOAD OCCURS SIMULTANEOUSLY.

F. REFER TO HILTI INSTRUCTION FOR USE SHEET FOR REQUIRED INSTALLATION INFORMATION. THREAD FORMING BOLT MAY BE INSTALLED USING A TORQUE WRENCH OR SI-AT-A22 PER INSTRUCTION FOR USE.

G. X-BT REQUIREMENT: MIN. STEEL BASE MATERIAL THICKNESS SHALL BE 5/16". MIN EDGE DISTANCE SHALL BE 3/8". MIN YIELD STRENGTH OF STEEL SHALL BE FY=36KSI.

TABLE A

	Max H, in	24	36	48
ALLOWABLE LOADS, lbs	Vertical (P)	850	600	370
	Transverse	255	180	111
	Longitudinal	255	180	111

All loading and design criteria supplied by customer is assumed accurate. Only the stated Design Assumptions were considered, and must be verified by the responsible Engineer of Record (EOR). The basis of Hilti component and connection design is the published data in the current Hilti Technical Guide, including material and cross-section properties, allowable load values, factors of safety, methods of calculation, and limiting factors. The EOR must verify suitability for any specific application, and the capacity of the supportive structure to receive the shown configuration and associated reaction loads. Modification to components and/or design may alter performance and must be evaluated by the EOR.

REVISION HISTORY

NO:	DESCRIPTION:	DATE:
A	ISSUE FOR REVIEW	09/21/2020
B	ISSUE FOR REVIEW	12/14/2020

PROJECT NAME:
CANTILEVER MT70 S 002

PROJECT DESCRIPTION:
CANTILEVER MT70 S 002

DRAWN:	CHECKED:	DESIGNED:	REVIEWED:
GAB	IDP	JDR	BVD

PAPER SIZE: ANSI B

PROJECT NUMBER: PROJECT - JOB CT7S2 - SHEET 1

BIM 360://Hilti - MT Typicals/CT7S2.rvt

MARK	ITEM NO.	DESCRIPTION	QTY.
1	2268367	MT-80 L OC	1
2	2272101	MT-B-GS O4U OC	1
3	387527	ANCHOR KB-TZ 1/2" x 4-1/2" SS304	4
4	2272084	MT-TFB OC	10
5	2273698	MT-EC-80	1

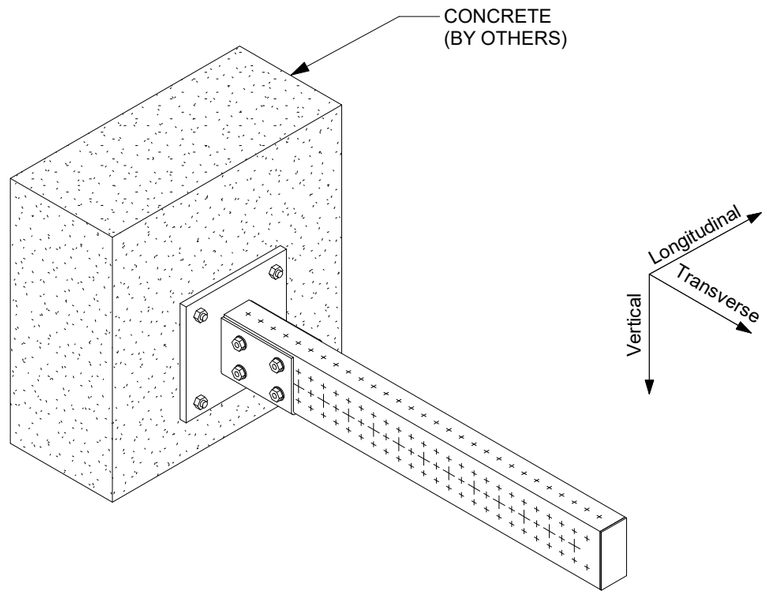

1 ISOMETRIC
N.T.S.

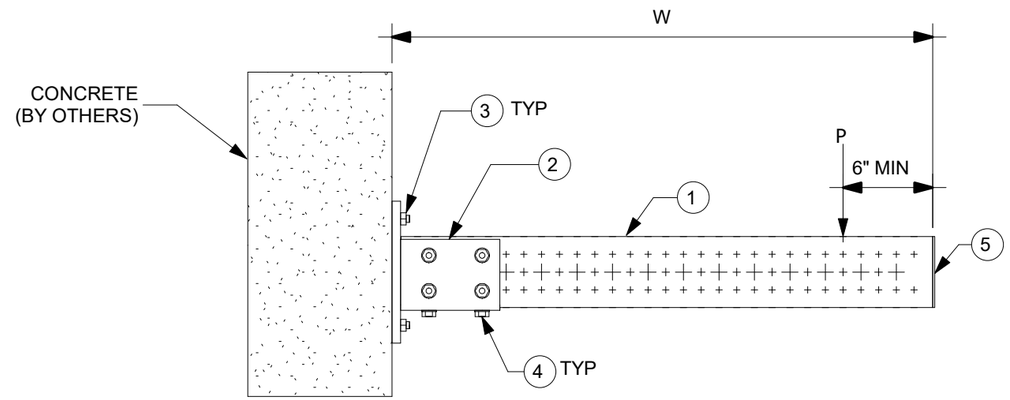

2 ELEVATION
N.T.S.

NOTE(S):

A. THE TYPICAL SUPPORT IS LOAD RATED AND DIMENSIONALLY LIMITED BASED ON DESIGN METHODOLOGY AND GENERIC NON-PROJECT SPECIFIC ASSUMPTIONS SET FORTH IN PROFIS MODULAR SUPPORTS ENGINEERING SOFTWARE. THE ENGINEER OF RECORD SHALL EVALUATE THIS TYPICAL SUPPORT TO DETERMINE ITS SUITABILITY FOR THE ACTUAL PROJECT SPECIFIC DESIGN CRITERIA AND REQUIREMENTS.

B. THE EVALUATION OF EXISTING STRUCTURE IS OUTSIDE OF THE TYPICAL DESIGN SCOPE AND SHALL BE PERFORMED BY THE ENGINEER OF RECORD.

C. TYPICAL SUPPORT DESIGN IS BASED ON INTERNATIONAL BUILDING CODE (IBC) 2018. SEE TABLE-A FOR ALLOWABLE STRENGTH DESIGN LOADS (STATIC U.N.O.); GOVERNING LATERAL LOADS NOTED IN THE ALLOWABLE LOAD TABLE IS MAXIMUM OF 30% OF DEAD LOAD.

D. ALL LOADS ASSUMED TO ACT ON THE SUPPORT, NO ECCENTRICITY CONSIDERED

E. MAXIMUM ALLOWABLE LOADS NOTED IN TABLE-A ARE BASED ON THE GOVERNING COMBINATION OF VERTICAL LOAD WITH TRANSVERSE LOAD OR VERTICAL LOAD WITH LONGITUDINAL LOAD. A SEPARATE ANALYSIS MUST BE PERFORMED WHEN TRANSVERSE AND LONGITUDINAL LOAD OCCURS SIMULTANEOUSLY.

F. REFER TO HILTI INSTRUCTION FOR USE SHEET FOR REQUIRED INSTALLATION INFORMATION.

G. USE ½" DIA. HILT KWIK BOLT-TZ WITH MIN 3-5/8" EFFECTIVE EMBEDMENT. INSTALL ANCHOR PER ESR-1917 AND HILTI'S INSTRUCTIONS FOR USE AND RECOMMENDATIONS. MIN. CONCRETE COMPRESSIVE STRENGTH F'C= 3000 PSI, MIN. CONCRETE EDGE DISTANCE = 6", AND MIN. CONCRETE THICKNESS 6".

H. CONCRETE ANCHORS NOTED IN THE BILL OF MATERIAL ARE DESIGNED ONLY FOR WIND LATERAL LOADING. ENGINEER OF RECORD TO VERIFY ADEQUACY OF ANCHOR WHEN TYPICAL IS BEING USED FOR SEISMIC LATERAL LOADING.

TABLE A

	Max W, in	18	24
ALLOWABLE LOADS, lbs	Vertical (P)	1400	1000
	Transverse	420	300
	Longitudinal	218	300

All loading and design criteria supplied by customer is assumed accurate. Only the stated Design Assumptions were considered, and must be verified by the responsible Engineer of Record (EOR). The basis of Hilti component and connection design is the published data in the current Hilti Technical Guide, including material and cross-section properties, allowable load values, factors of safety, methods of calculation, and limiting factors. The EOR must verify suitability for any specific application, and the capacity of the supportive structure to receive the shown configuration and associated reaction loads. Modification to components and/or design may alter performance and must be evaluated by the EOR.

REVISION HISTORY

NO:	DESCRIPTION:	DATE:
A	ISSUE FOR REVIEW	12/14/2020

PROJECT NAME:
CANTILEVER MT80 C 001

PROJECT DESCRIPTION:
CANTILEVER MT80 C 001

DRAWN:	CHECKED:	DESIGNED:	REVIEWED:
GAB	BAP	JDR	BVD

PAPER SIZE: ANSI B

PROJECT NUMBER: - CT8C1 - 1

BIM 360://Hilti - MT Typicals/CT8C1.rvt

MARK	ITEM NO.	DESCRIPTION	QTY.
1	2268365	MT-70 L OC	2
2	2268365	MT-70 L OC	1
3	2272101	MT-B-GS O4U OC	2
4	2272073	MT-C-GSP L OC	4
5	2272084	MT-TFB OC	28
6	387527	ANCHOR KB-TZ 1/2" x 4-1/2" SS304	8
7	2273697	MT-EC-70	2

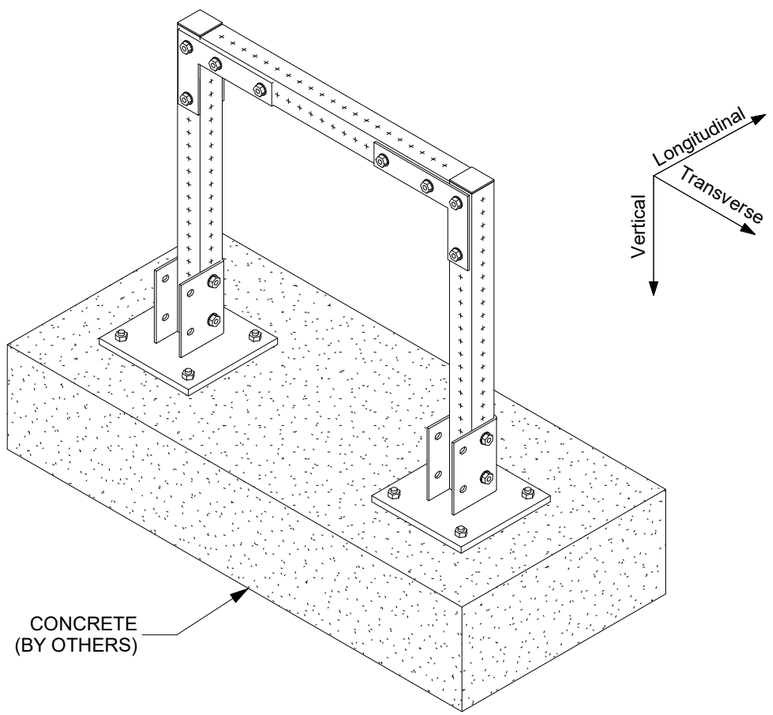

1 ISOMETRIC
N.T.S.

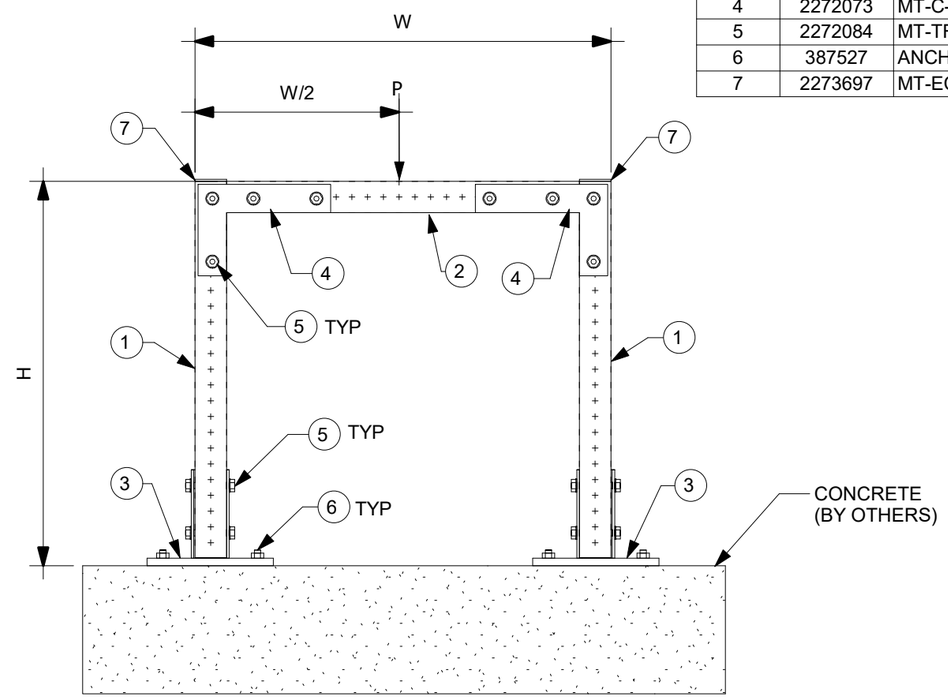

2 ELEVATION
N.T.S.

NOTE(S):

A. THE TYPICAL SUPPORT IS LOAD RATED AND DIMENSIONALLY LIMITED BASED ON DESIGN METHODOLOGY AND GENERIC NON-PROJECT SPECIFIC ASSUMPTIONS SET FORTH IN PROFIS MODULAR SUPPORTS ENGINEERING SOFTWARE. THE ENGINEER OF RECORD SHALL EVALUATE THIS TYPICAL SUPPORT TO DETERMINE ITS SUITABILITY FOR THE ACTUAL PROJECT SPECIFIC DESIGN CRITERIA AND REQUIREMENTS.

B. THE EVALUATION OF EXISTING STRUCTURE IS OUTSIDE OF THE TYPICAL DESIGN SCOPE AND SHALL BE PERFORMED BY THE ENGINEER OF RECORD.

C. TYPICAL SUPPORT DESIGN IS BASED ON INTERNATIONAL BUILDING CODE (IBC) 2018. SEE TABLE-A FOR ALLOWABLE STRENGTH DESIGN LOADS (STATIC U.N.O.); GOVERNING LATERAL LOADS NOTED IN THE ALLOWABLE LOAD TABLE IS MAXIMUM OF 30% OF DEAD LOAD.

D. ALL LOADS ASSUMED TO ACT ON THE SUPPORT, NO ECCENTRICITY CONSIDERED

E. MAXIMUM ALLOWABLE LOADS NOTED IN TABLE-A ARE BASED ON THE GOVERNING COMBINATION OF VERTICAL LOAD WITH TRANSVERSE LOAD OR VERTICAL LOAD WITH LONGITUDINAL LOAD. A SEPARATE ANALYSIS MUST BE PERFORMED WHEN TRANSVERSE AND LONGITUDINAL LOAD OCCURS SIMULTANEOUSLY.

F. REFER TO HILTI INSTRUCTION FOR USE SHEET FOR REQUIRED INSTALLATION INFORMATION.

G. USE ½" DIA. HILT KWIK BOLT-TZ WITH MIN 3-5/8" EFFECTIVE EMBEDMENT. INSTALL ANCHOR PER ESR-1917 AND HILTI'S INSTRUCTIONS FOR USE AND RECOMMENDATIONS. MIN. CONCRETE COMPRESSIVE STRENGTH F'C= 3000 PSI, MIN. CONCRETE EDGE DISTANCE = 6", AND MIN. CONCRETE THICKNESS 6".

H. CONCRETE ANCHORS NOTED IN THE BILL OF MATERIAL ARE DESIGNED ONLY FOR WIND LATERAL LOADING. ENGINEER OF RECORD TO VERIFY ADEQUACY OF ANCHOR WHEN TYPICAL IS BEING USED FOR SEISMIC LATERAL LOADING.

TABLE A

	Max H, in	24	36	48
	Max W, in	24	36	48
ALLOWABLE LOADS, lbs	Vertical (P)	1400	950	620
	Transverse	420	285	186
	Longitudinal	420	285	186

All loading and design criteria supplied by customer is assumed accurate. Only the stated Design Assumptions were considered, and must be verified by the responsible Engineer of Record (EOR). The basis of Hilti component and connection design is the published data in the current Hilti Technical Guide, including material and cross-section properties, allowable load values, factors of safety, methods of calculation, and limiting factors. The EOR must verify suitability for any specific application, and the capacity of the supportive structure to receive the shown configuration and associated reaction loads. Modification to components and/or design may alter performance and must be evaluated by the EOR.

REVISION HISTORY

NO:	DESCRIPTION:	DATE:
A	ISSUE FOR REVIEW	12/09/2020

PROJECT NAME:
GOAL POST MT70 C 001

PROJECT DESCRIPTION:
GOAL POST MT70 C 001

DRAWN:	CHECKED:	DESIGNED:	REVIEWED:
GAB	IDP	JDR	BVD

PAPER SIZE: ANSI B

PROJECT NUMBER: - GP7C1 - 1
(PROJECT / JOB / SHEET)

BIM 360://Hilti - MT Typicals/GP7C1.rvt

MARK	ITEM NO.	DESCRIPTION	QTY.
1	2268365	MT-70 L OC	2
2	2268365	MT-70 L OC	2
3	2272101	MT-B-GS O4U OC	2
4	2272073	MT-C-GSP L OC	8
5	2272084	MT-TFB OC	44
6	387527	ANCHOR KB-TZ 1/2" x 4-1/2" SS304	8
7	2273697	MT-EC-70	2

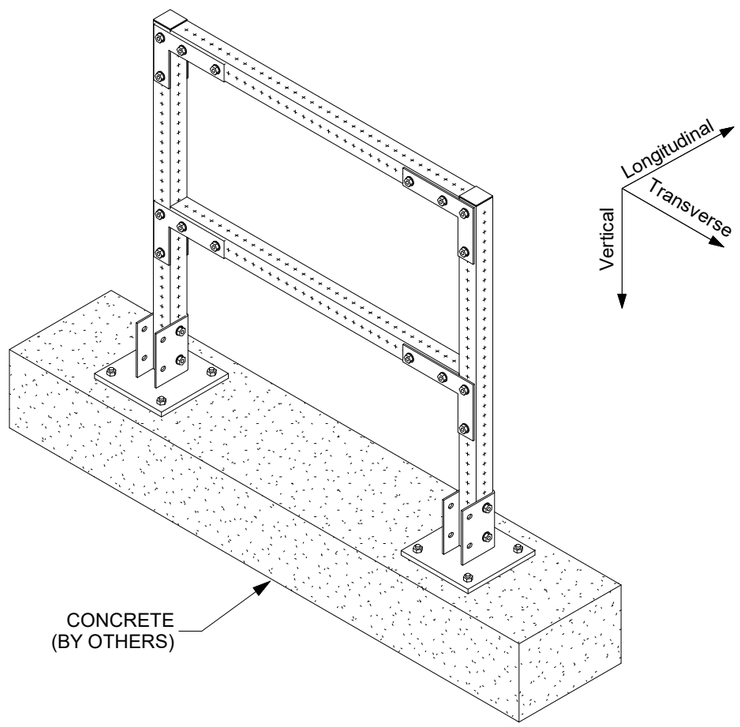

1 ISOMETRIC
N.T.S.

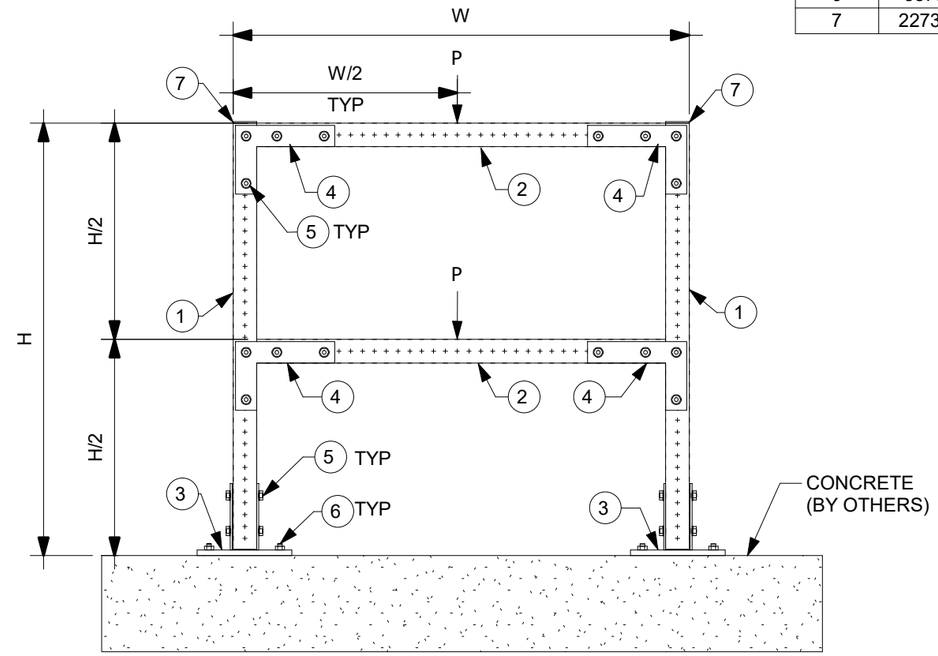

2 ELEVATION
N.T.S.

NOTE(S):

A. THE TYPICAL SUPPORT IS LOAD RATED AND DIMENSIONALLY LIMITED BASED ON DESIGN METHODOLOGY AND GENERIC NON-PROJECT SPECIFIC ASSUMPTIONS SET FORTH IN PROFIS MODULAR SUPPORTS ENGINEERING SOFTWARE. THE ENGINEER OF RECORD SHALL EVALUATE THIS TYPICAL SUPPORT TO DETERMINE ITS SUITABILITY FOR THE ACTUAL PROJECT SPECIFIC DESIGN CRITERIA AND REQUIREMENTS.

B. THE EVALUATION OF EXISTING STRUCTURE IS OUTSIDE OF THE TYPICAL DESIGN SCOPE AND SHALL BE PERFORMED BY THE ENGINEER OF RECORD.

C. TYPICAL SUPPORT DESIGN IS BASED ON INTERNATIONAL BUILDING CODE (IBC) 2018. SEE TABLE-A FOR ALLOWABLE STRENGTH DESIGN LOADS (STATIC U.N.O.); GOVERNING LATERAL LOADS NOTED IN THE ALLOWABLE LOAD TABLE IS MAXIMUM OF 30% OF DEAD LOAD.

D. ALL LOADS ASSUMED TO ACT ON THE SUPPORT, NO ECCENTRICITY CONSIDERED

E. MAXIMUM ALLOWABLE LOADS NOTED IN TABLE-A ARE BASED ON THE GOVERNING COMBINATION OF VERTICAL LOAD WITH TRANSVERSE LOAD OR VERTICAL LOAD WITH LONGITUDINAL LOAD. A SEPARATE ANALYSIS MUST BE PERFORMED WHEN TRANSVERSE AND LONGITUDINAL LOAD OCCURS SIMULTANEOUSLY.

F. REFER TO HILTI INSTRUCTION FOR USE SHEET FOR REQUIRED INSTALLATION INFORMATION.

G. USE ½" DIA. HILT KWIK BOLT-TZ WITH MIN 3-5/8" EFFECTIVE EMBEDMENT. INSTALL ANCHOR PER ESR-1917 AND HILTI'S INSTRUCTIONS FOR USE AND RECOMMENDATIONS. MIN. CONCRETE COMPRESSIVE STRENGTH F'C= 3000 PSI, MIN. CONCRETE EDGE DISTANCE = 6", AND MIN. CONCRETE THICKNESS 6".

H. CONCRETE ANCHORS NOTED IN THE BILL OF MATERIAL ARE DESIGNED ONLY FOR WIND LATERAL LOADING. ENGINEER OF RECORD TO VERIFY ADEQUACY OF ANCHOR WHEN TYPICAL IS BEING USED FOR SEISMIC LATERAL LOADING.

TABLE A

	Max H, in	24	36	48
	Max W, in	24	36	48
ALLOWABLE LOADS, lbs	Vertical (P)	1400	850	475
	Transverse	420	255	143
	Longitudinal	420	255	143

All loading and design criteria supplied by customer is assumed accurate. Only the stated Design Assumptions were considered, and must be verified by the responsible Engineer of Record (EOR). The basis of Hilti component and connection design is the published data in the current Hilti Technical Guide, including material and cross-section properties, allowable load values, factors of safety, methods of calculation, and limiting factors. The EOR must verify suitability for any specific application, and the capacity of the supportive structure to receive the shown configuration and associated reaction loads. Modification to components and/or design may alter performance and must be evaluated by the EOR.

REVISION HISTORY

NO:	DESCRIPTION:	DATE:
A	ISSUE FOR REVIEW	12/08/2020

PROJECT NAME:
GOAL POST MT70 C 002

PROJECT DESCRIPTION:
GOAL POST MT70 C 002

DRAWN:	CHECKED:	DESIGNED:	REVIEWED:
GAB	IDP	JDR	BVD

PAPER SIZE: ANSI B

PROJECT NUMBER: PROJECT - JOB GP7C2 - SHEET 1

BIM 360://Hilti - MT Typicals/GP7C2.rvt

MARK	ITEM NO.	DESCRIPTION	QTY.
1	2268365	MT-70 L OC	2
2	2268365	MT-70 L OC	3
3	2272101	MT-B-GS O4U OC	2
4	2272066	MT-C-GS OC	6
5	2272084	MT-TFB OC	37
6	387527	ANCHOR KB-TZ 1/2" x 4-1/2" SS304	8
7	2273697	MT-EC-70	2

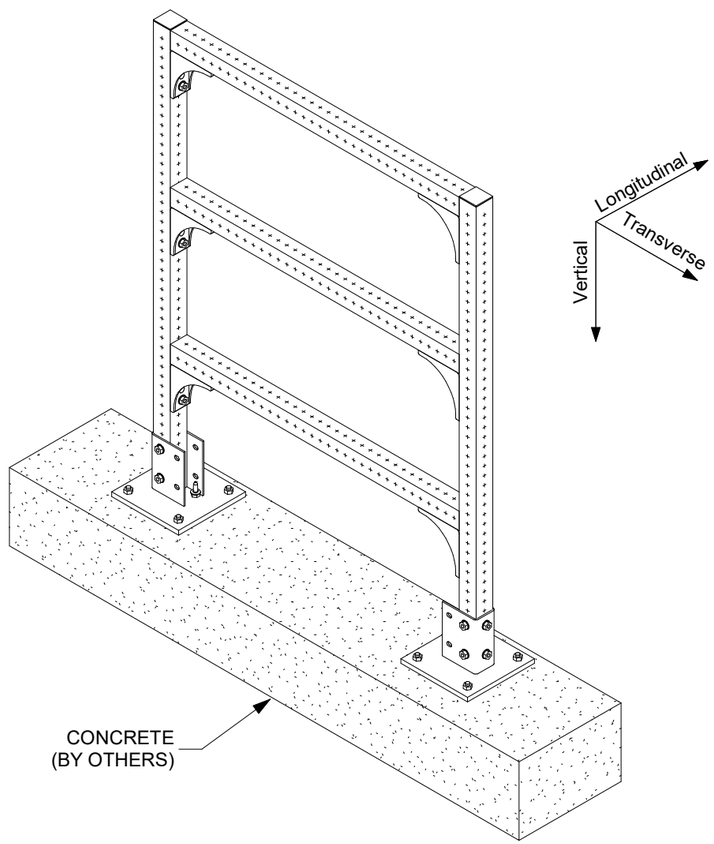

1 ISOMETRIC
N.T.S.

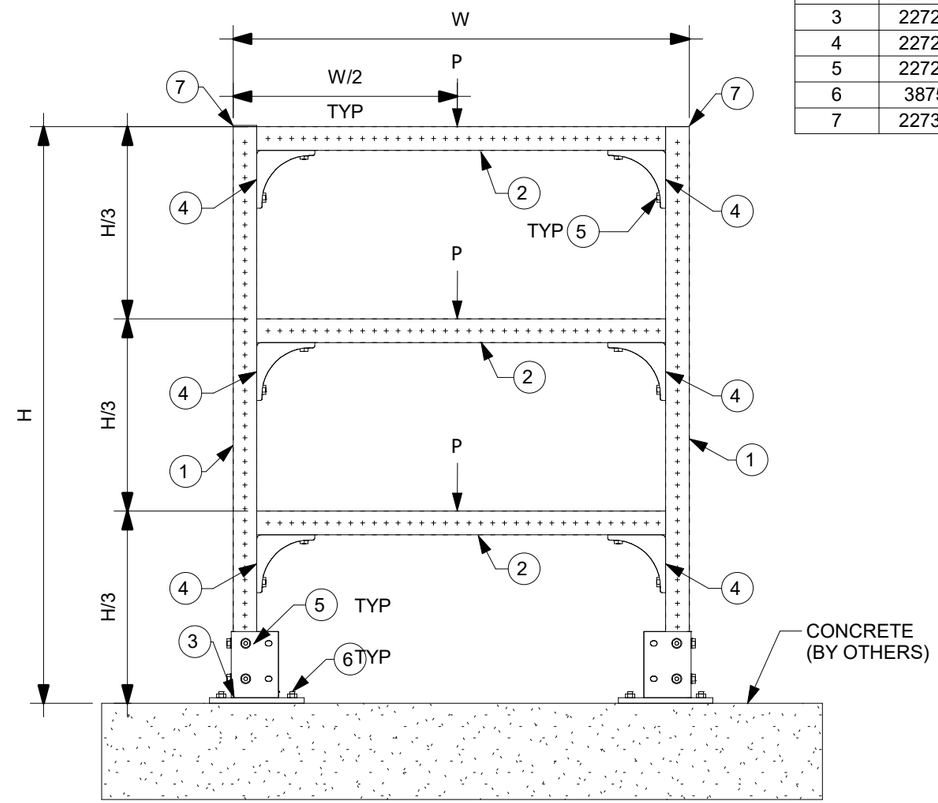

2 ELEVATION
N.T.S.

NOTE(S):

A. THE TYPICAL SUPPORT IS LOAD RATED AND DIMENSIONALLY LIMITED BASED ON DESIGN METHODOLOGY AND GENERIC NON-PROJECT SPECIFIC ASSUMPTIONS SET FORTH IN PROFIS MODULAR SUPPORTS ENGINEERING SOFTWARE. THE ENGINEER OF RECORD SHALL EVALUATE THIS TYPICAL SUPPORT TO DETERMINE ITS SUITABILITY FOR THE ACTUAL PROJECT SPECIFIC DESIGN CRITERIA AND REQUIREMENTS.

B. THE EVALUATION OF EXISTING STRUCTURE IS OUTSIDE OF THE TYPICAL DESIGN SCOPE AND SHALL BE PERFORMED BY THE ENGINEER OF RECORD.

C. TYPICAL SUPPORT DESIGN IS BASED ON INTERNATIONAL BUILDING CODE (IBC) 2018. SEE TABLE-A FOR ALLOWABLE STRENGTH DESIGN LOADS (STATIC U.N.O.); GOVERNING LATERAL LOADS NOTED IN THE ALLOWABLE LOAD TABLE IS MAXIMUM OF 30% OF DEAD LOAD.

D. ALL LOADS ASSUMED TO ACT ON THE SUPPORT, NO ECCENTRICITY CONSIDERED

E. MAXIMUM ALLOWABLE LOADS NOTED IN TABLE-A ARE BASED ON THE GOVERNING COMBINATION OF VERTICAL LOAD WITH TRANSVERSE LOAD OR VERTICAL LOAD WITH LONGITUDINAL LOAD. A SEPARATE ANALYSIS MUST BE PERFORMED WHEN TRANSVERSE AND LONGITUDINAL LOAD OCCURS SIMULTANEOUSLY.

F. REFER TO HILTI INSTRUCTION FOR USE SHEET FOR REQUIRED INSTALLATION INFORMATION.

G. USE ½" DIA. HILT KWIK BOLT-TZ WITH MIN 3-5/8" EFFECTIVE EMBEDMENT. INSTALL ANCHOR PER ESR-1917 AND HILTI'S INSTRUCTIONS FOR USE AND RECOMMENDATIONS. MIN. CONCRETE COMPRESSIVE STRENGTH F'C= 3000 PSI, MIN. CONCRETE EDGE DISTANCE = 6", AND MIN. CONCRETE THICKNESS 6".

H. CONCRETE ANCHORS NOTED IN THE BILL OF MATERIAL ARE DESIGNED ONLY FOR WIND LATERAL LOADING. ENGINEER OF RECORD TO VERIFY ADEQUACY OF ANCHOR WHEN TYPICAL IS BEING USED FOR SEISMIC LATERAL LOADING.

I. MT-C-GS-OC (#227066) MAY BE REPLACED WITH MT-C-GS A OC (#227068) WITHOUT REDUCTION OF LOADS.

TABLE A				
	Max H, in	24	36	48
	Max W, in	24	36	48
ALLOWABLE LOADS, lbs	Vertical (P)	1200	675	375
	Transverse	360	203	113
	Longitudinal	360	203	113

All loading and design criteria supplied by customer is assumed accurate. Only the stated Design Assumptions were considered, and must be verified by the responsible Engineer of Record (EOR). The basis of Hilti component and connection design is the published data in the current Hilti Technical Guide, including material and cross-section properties, allowable load values, factors of safety, methods of calculation, and limiting factors. The EOR must verify suitability for any specific application, and the capacity of the supportive structure to receive the shown configuration and associated reaction loads. Modification to components and/or design may alter performance and must be evaluated by the EOR.

REVISION HISTORY

NO:	DESCRIPTION:	DATE:
A	ISSUE FOR REVIEW	09/21/2020
B	ISSUE FOR REVIEW	12/14/2020

PROJECT NAME:
GOAL POST MT70 C 003

PROJECT DESCRIPTION:
GOAL POST MT70 C 003

DRAWN:	CHECKED:	DESIGNED:	REVIEWED:
GAB	IDP	JDR	BVD

PAPER SIZE: ANSI B

PROJECT NUMBER: PROJECT - JOB GP7C3 - SHEET 1

BIM 360://Hilti - MT Typicals/GP7C3.rvt

MARK	ITEM NO.	DESCRIPTION	QTY.
1	2268365	MT-70 L OC	2
2	2268365	MT-70 L OC	1
3	2272101	MT-B-GS O4U OC	2
4	2272073	MT-C-GSP L OC	4
5	2272084	MT-TFB OC	28
6	2194341	X-BT-MR W10/15 SN 8	8
7	2273697	MT-EC-70	2

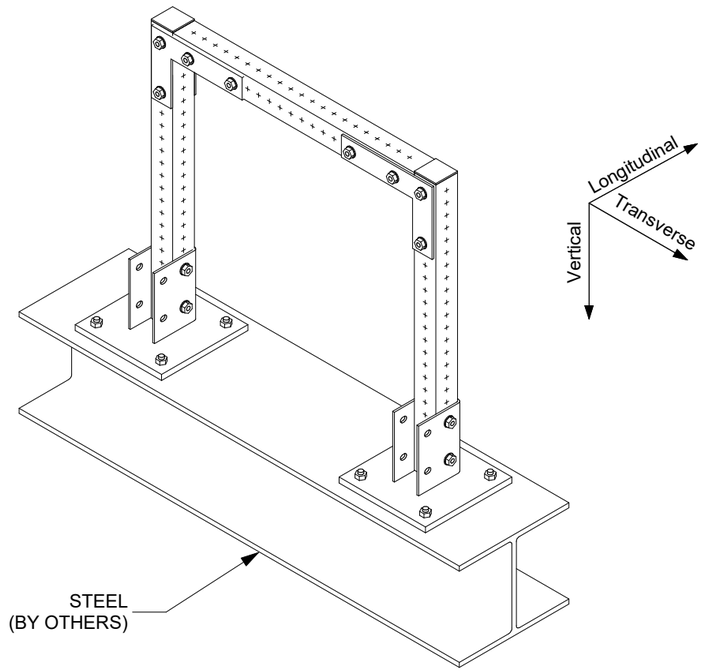

1 ISOMETRIC
N.T.S.

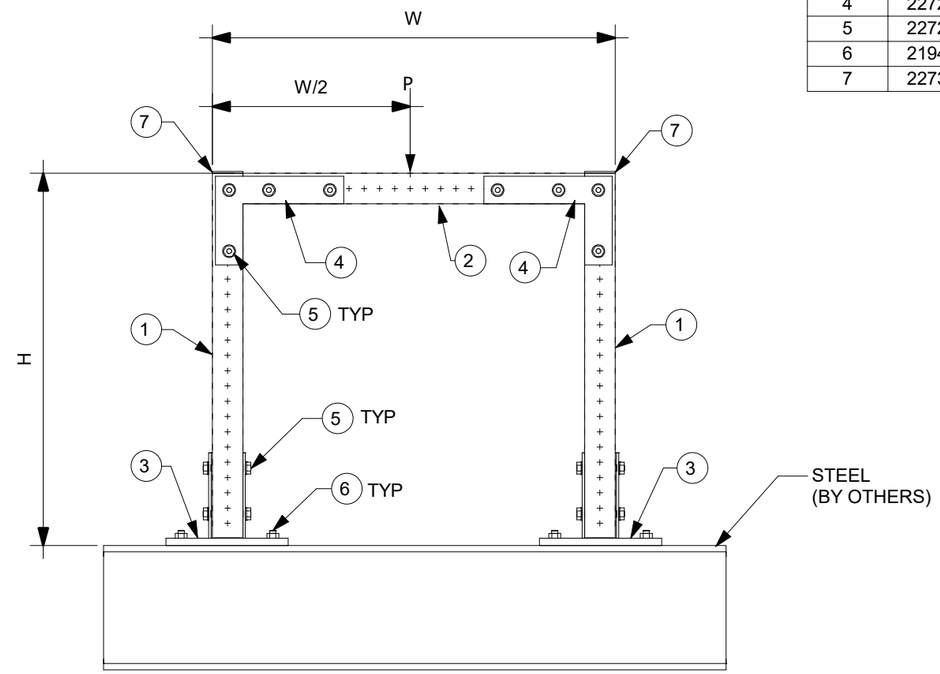

2 ELEVATION
N.T.S.

NOTE(S):

A. THE TYPICAL SUPPORT IS LOAD RATED AND DIMENSIONALLY LIMITED BASED ON DESIGN METHODOLOGY AND GENERIC NON-PROJECT SPECIFIC ASSUMPTIONS SET FORTH IN PROFIS MODULAR SUPPORTS ENGINEERING SOFTWARE. THE ENGINEER OF RECORD SHALL EVALUATE THIS TYPICAL SUPPORT TO DETERMINE ITS SUITABILITY FOR THE ACTUAL PROJECT SPECIFIC DESIGN CRITERIA AND REQUIREMENTS.

B. THE EVALUATION OF EXISTING STRUCTURE IS OUTSIDE OF THE TYPICAL DESIGN SCOPE AND SHALL BE PERFORMED BY THE ENGINEER OF RECORD.

C. TYPICAL SUPPORT DESIGN IS BASED ON INTERNATIONAL BUILDING CODE (IBC) 2018. SEE TABLE-A FOR ALLOWABLE STRENGTH DESIGN LOADS (STATIC U.N.O.); GOVERNING LATERAL LOADS NOTED IN THE ALLOWABLE LOAD TABLE IS MAXIMUM OF 30% OF DEAD LOAD.

D. ALL LOADS ASSUMED TO ACT ON THE SUPPORT, NO ECCENTRICITY CONSIDERED.

E. MAXIMUM ALLOWABLE LOADS NOTED IN TABLE-A ARE BASED ON THE GOVERNING COMBINATION OF VERTICAL LOAD WITH TRANSVERSE LOAD OR VERTICAL LOAD WITH LONGITUDINAL LOAD. A SEPARATE ANALYSIS MUST BE PERFORMED WHEN TRANSVERSE AND LONGITUDINAL LOAD OCCURS SIMULTANEOUSLY.

F. REFER TO HILTI INSTRUCTION FOR USE SHEET FOR REQUIRED INSTALLATION INFORMATION. THREAD FORMING BOLT MAY BE INSTALLED USING A TORQUE WRENCH OR SI-AT-A22 PER INSTRUCTION FOR USE.

G. X-BT REQUIREMENT: MIN. STEEL BASE MATERIAL THICKNESS SHALL BE 5/16". MIN EDGE DISTANCE SHALL BE 3/8". MIN YIELD STRENGTH OF STEEL SHALL BE FY=36KSI.

TABLE A				
	Max H, in	24	36	48
	Max W, in	24	36	48
ALLOWABLE LOADS, lbs	Vertical (P)	1400	950	620
	Transverse	420	285	186
	Longitudinal	420	285	186

All loading and design criteria supplied by customer is assumed accurate. Only the stated Design Assumptions were considered, and must be verified by the responsible Engineer of Record (EOR). The basis of Hilti component and connection design is the published data in the current Hilti Technical Guide, including material and cross-section properties, allowable load values, factors of safety, methods of calculation, and limiting factors. The EOR must verify suitability for any specific application, and the capacity of the supportive structure to receive the shown configuration and associated reaction loads. Modification to components and/or design may alter performance and must be evaluated by the EOR.

REVISION HISTORY

NO:	DESCRIPTION:	DATE:
A	ISSUE FOR REVIEW	12/8/2020

PROJECT NAME:
GOAL POST MT70 S 001

PROJECT DESCRIPTION:
GOAL POST MT70 S 001

DRAWN:	CHECKED:	DESIGNED:	REVIEWED:
GAB	IDP	JDR	BVD

PAPER SIZE: ANSI B

PROJECT NUMBER: PROJECT - JOB - SHEET
GP7S1 - 1

BIM 360://Hilti - MT Typicals/GP7S1.rvt

MARK	ITEM NO.	DESCRIPTION	QTY.
1	2268365	MT-70 L OC	1
2	2268365	MT-70 L OC	1
3	2272101	MT-B-GS O4U OC	1
4	2272073	MT-C-GSP L OC	2
5	2272084	MT-TFB OC	14
6	387527	ANCHOR KB-TZ 1/2" x 4-1/2" SS304	4
7	2273697	MT-EC-70	2

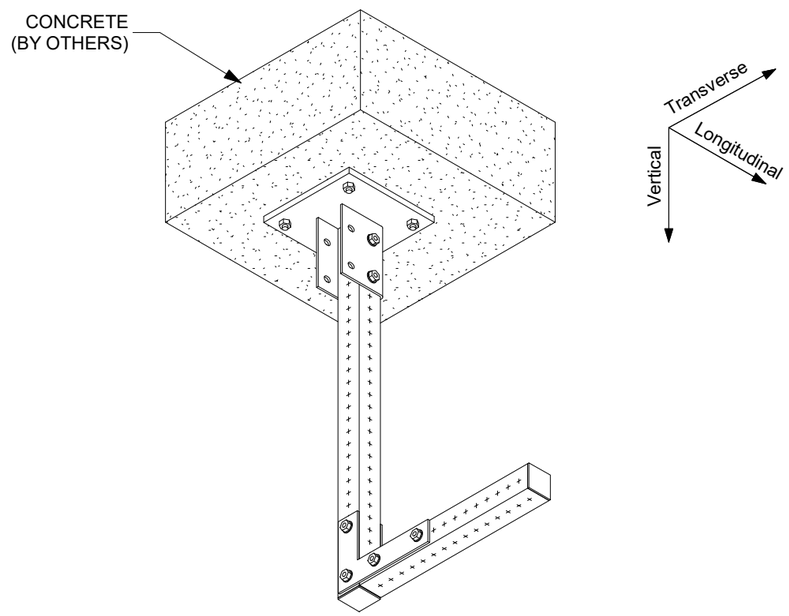

1 ISOMETRIC
N.T.S.

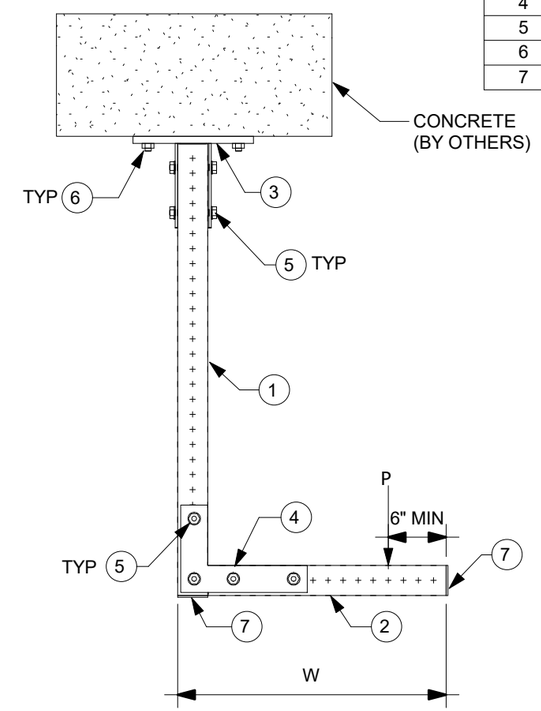

2 ELEVATION
N.T.S.

NOTE(S):

A. THE TYPICAL SUPPORT IS LOAD RATED AND DIMENSIONALLY LIMITED BASED ON DESIGN METHODOLOGY AND GENERIC NON-PROJECT SPECIFIC ASSUMPTIONS SET FORTH IN PROFIS MODULAR SUPPORTS ENGINEERING SOFTWARE. THE ENGINEER OF RECORD SHALL EVALUATE THIS TYPICAL SUPPORT TO DETERMINE ITS SUITABILITY FOR THE ACTUAL PROJECT SPECIFIC DESIGN CRITERIA AND REQUIREMENTS.

B. THE EVALUATION OF EXISTING STRUCTURE IS OUTSIDE OF THE TYPICAL DESIGN SCOPE AND SHALL BE PERFORMED BY THE ENGINEER OF RECORD.

C. TYPICAL SUPPORT DESIGN IS BASED ON INTERNATIONAL BUILDING CODE (IBC) 2018. SEE TABLE-A FOR ALLOWABLE STRENGTH DESIGN LOADS (STATIC U.N.O.); GOVERNING LATERAL LOADS NOTED IN THE ALLOWABLE LOAD TABLE IS MAXIMUM OF 30% OF DEAD LOAD OR WIND LOADING BASED ON WIND CRITERIA NOTED ON WIND DESIGN BASIS SHEET.

D. ALL LOADS ASSUMED TO ACT ON THE SUPPORT, NO ECCENTRICITY CONSIDERED

E. MAXIMUM ALLOWABLE LOADS NOTED IN TABLE-A ARE BASED ON THE GOVERNING COMBINATION OF VERTICAL LOAD WITH TRANSVERSE LOAD OR VERTICAL LOAD WITH LONGITUDINAL LOAD. A SEPARATE ANALYSIS MUST BE PERFORMED WHEN TRANSVERSE AND LONGITUDINAL LOAD OCCURS SIMULTANEOUSLY.

F. REFER TO HILTI INSTRUCTION FOR USE SHEET FOR REQUIRED INSTALLATION INFORMATION.

G. USE ½" DIA. HILT KWIK BOLT-TZ WITH MIN 3-5/8" EFFECTIVE EMBEDMENT. INSTALL ANCHOR PER ESR-1917 AND HILTI'S INSTRUCTIONS FOR USE AND RECOMMENDATIONS. MIN. CONCRETE COMPRESSIVE STRENGTH F'C= 3000 PSI, MIN. CONCRETE EDGE DISTANCE = 6", AND MIN. CONCRETE THICKNESS 6".

H. CONCRETE ANCHORS NOTED IN THE BILL OF MATERIAL ARE DESIGNED ONLY FOR WIND LATERAL LOADING. ENGINEER OF RECORD TO VERIFY ADEQUACY OF ANCHOR WHEN TYPICAL IS BEING USED FOR SEISMIC LATERAL LOADING.

TABLE A			
	Max H, in	24	36
	Max W, in	12	18
ALLOWABLE LOADS, lbs	Vertical (P)	400	150
	Transverse	120	45
	Longitudinal	120	45

All loading and design criteria supplied by customer is assumed accurate. Only the stated Design Assumptions were considered, and must be verified by the responsible Engineer of Record (EOR). The basis of Hilti component and connection design is the published data in the current Hilti Technical Guide, including material and cross-section properties, allowable load values, factors of safety, methods of calculation, and limiting factors. The EOR must verify suitability for any specific application, and the capacity of the supportive structure to receive the shown configuration and associated reaction loads. Modification to components and/or design may alter performance and must be evaluated by the EOR.

REVISION HISTORY

NO:	DESCRIPTION:	DATE:
A	ISSUE FOR REVIEW	09/21/2020

PROJECT NAME:
L FRAME MT70 C 001

PROJECT DESCRIPTION:
L FRAME MT70 C 001

DRAWN:	CHECKED:	DESIGNED:	REVIEWED:
GAB	IDP	JDR	BVD

PAPER SIZE: ANSI B

PROJECT NUMBER: - LF7C1 - 1
(PROJECT | JOB | SHEET)

C:\Users\beavgra\BIM 360\Hilti North America\Hilti - MT Typicals\Project Files\Hilti Typicals\L Frame\LF7C1.rvt

MARK	ITEM NO.	DESCRIPTION	QTY.
1	2268365	MT-70 L OC	1
2	2268365	MT-70 L OC	1
3	2272101	MT-B-GS O4U OC	1
4	2272073	MT-C-GSP L OC	2
5	2272084	MT-TFB OC	14
6	2194341	X-BT-MR W10/15 SN 8	4
7	2273697	MT-EC-70	2

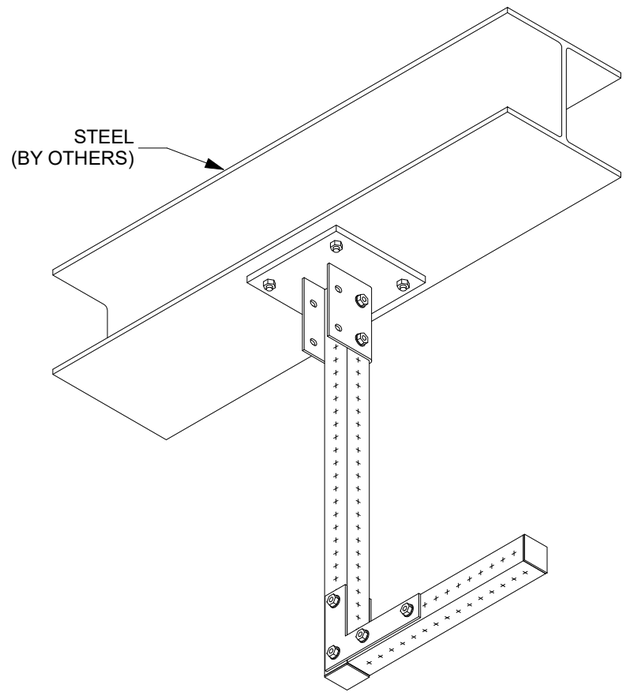

1 ISOMETRIC
N.T.S.

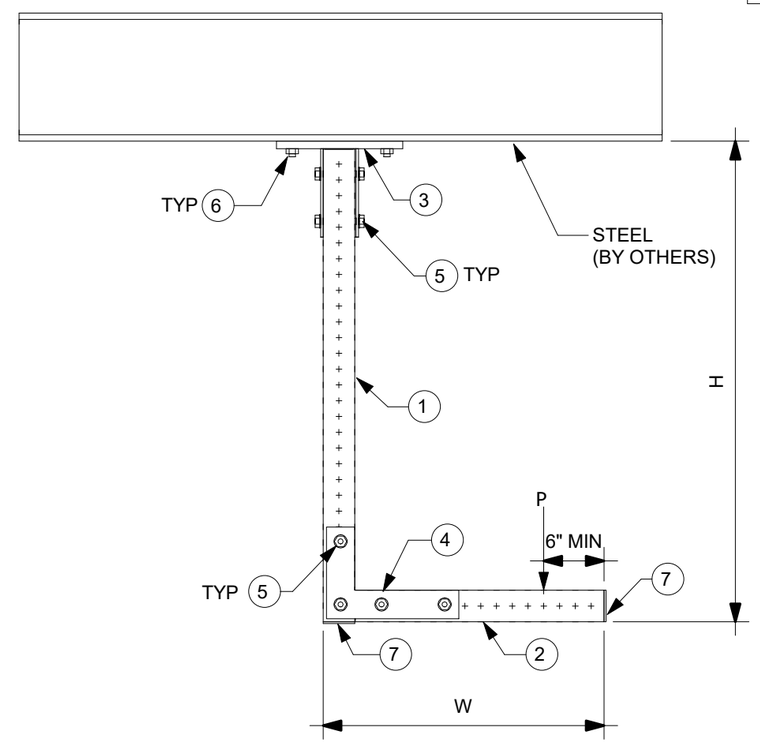

2 ELEVATION
N.T.S.

NOTE(S):

A. THE TYPICAL SUPPORT IS LOAD RATED AND DIMENSIONALLY LIMITED BASED ON DESIGN METHODOLOGY AND GENERIC NON-PROJECT SPECIFIC ASSUMPTIONS SET FORTH IN PROFIS MODULAR SUPPORTS ENGINEERING SOFTWARE. THE ENGINEER OF RECORD SHALL EVALUATE THIS TYPICAL SUPPORT TO DETERMINE ITS SUITABILITY FOR THE ACTUAL PROJECT SPECIFIC DESIGN CRITERIA AND REQUIREMENTS.

B. THE EVALUATION OF EXISTING STRUCTURE IS OUTSIDE OF THE TYPICAL DESIGN SCOPE AND SHALL BE PERFORMED BY THE ENGINEER OF RECORD.

C. TYPICAL SUPPORT DESIGN IS BASED ON INTERNATIONAL BUILDING CODE (IBC) 2018. SEE TABLE-A FOR ALLOWABLE STRENGTH DESIGN LOADS (STATIC U.N.O.); GOVERNING LATERAL LOADS NOTED IN THE ALLOWABLE LOAD TABLE IS MAXIMUM OF 30% OF DEAD LOAD OR WIND LOADING BASED ON WIND CRITERIA NOTED ON WIND DESIGN BASIS SHEET.

D. ALL LOADS ASSUMED TO ACT ON THE SUPPORT, NO ECCENTRICITY CONSIDERED.

E. MAXIMUM ALLOWABLE LOADS NOTED IN TABLE-A ARE BASED ON THE GOVERNING COMBINATION OF VERTICAL LOAD WITH TRANSVERSE LOAD OR VERTICAL LOAD WITH LONGITUDINAL LOAD. A SEPARATE ANALYSIS MUST BE PERFORMED WHEN TRANSVERSE AND LONGITUDINAL LOAD OCCURS SIMULTANEOUSLY.

F. REFER TO HILTI INSTRUCTION FOR USE SHEET FOR REQUIRED INSTALLATION INFORMATION. THREAD FORMING BOLT MAY BE INSTALLED USING A TORQUE WRENCH OR SI-AT-A22 PER INSTRUCTION FOR USE.

G. X-BT REQUIREMENT: MIN. STEEL BASE MATERIAL THICKNESS SHALL BE 5/16". MIN EDGE DISTANCE SHALL BE 3/8". MIN YIELD STRENGTH OF STEEL SHALL BE FY=36KSI.

TABLE A			
	Max H, in	24	36
	Max W, in	12	18
ALLOWABLE LOADS, lbs	Vertical (P)	450	150
	Transverse	135	45
	Longitudinal	135	45

All loading and design criteria supplied by customer is assumed accurate. Only the stated Design Assumptions were considered, and must be verified by the responsible Engineer of Record (EOR). The basis of Hilti component and connection design is the published data in the current Hilti Technical Guide, including material and cross-section properties, allowable load values, factors of safety, methods of calculation, and limiting factors. The EOR must verify suitability for any specific application, and the capacity of the supportive structure to receive the shown configuration and associated reaction loads. Modification to components and/or design may alter performance and must be evaluated by the EOR.

REVISION HISTORY

NO:	DESCRIPTION:	DATE:
A	ISSUE FOR REVIEW	09/21/2020

PROJECT NAME:

L FRAME MT70 S 001

PROJECT DESCRIPTION:

L FRAME MT70 S 001

DRAWN:	CHECKED:	DESIGNED:	REVIEWED:
GAB	IDP	JDR	BVD

PAPER SIZE: ANSI B

PROJECT NUMBER:

PROJECT	JOB	SHEET
-	LF7S1 -	1

C:\Users\beavgra\BIM 360\Hilti North America\Hilti - MT Typicals\Project Files\Hilti Typicals\L Frame\LF7S1.rvt

MARK	ITEM NO.	DESCRIPTION	QTY.
1	2268365	MT-70 L OC	1
2	2272101	MT-B-GS O4U OC	1
3	2272084	MT-TFB OC	6
4	387527	ANCHOR KB-TZ 1/2" x 4-1/2" SS304	4
5	2273697	MT-EC-70	1

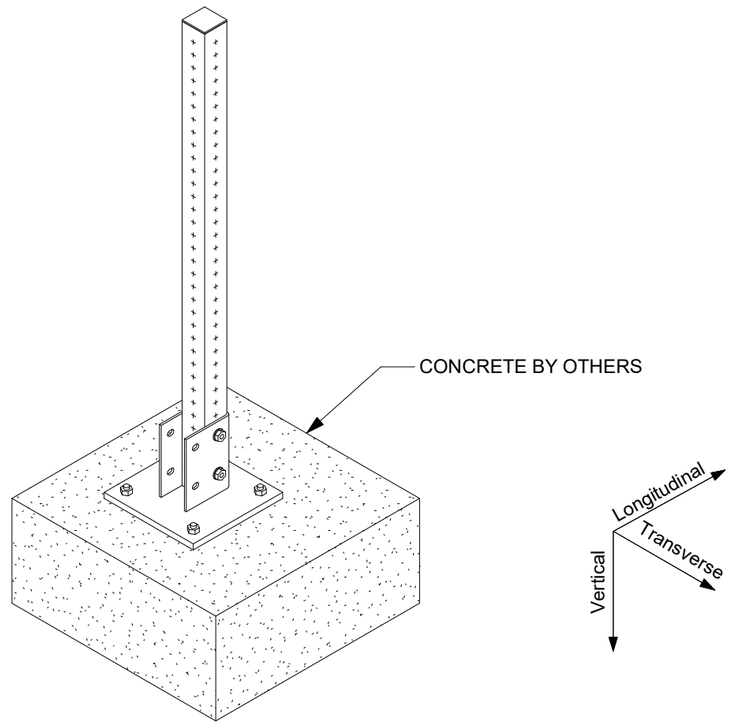

1 ISOMETRIC
N.T.S.

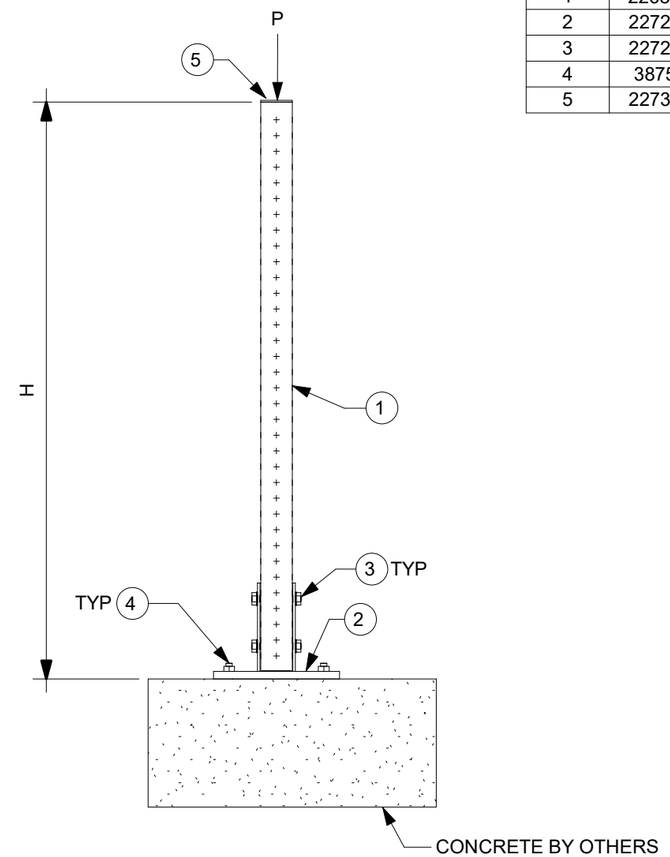

2 ELEVATION
N.T.S.

NOTE(S):

A. THE TYPICAL SUPPORT IS LOAD RATED AND DIMENSIONALLY LIMITED BASED ON DESIGN METHODOLOGY AND GENERIC NON-PROJECT SPECIFIC ASSUMPTIONS SET FORTH IN PROFIS MODULAR SUPPORTS ENGINEERING SOFTWARE. THE ENGINEER OF RECORD SHALL EVALUATE THIS TYPICAL SUPPORT TO DETERMINE ITS SUITABILITY FOR THE ACTUAL PROJECT SPECIFIC DESIGN CRITERIA AND REQUIREMENTS.

B. THE EVALUATION OF EXISTING STRUCTURE IS OUTSIDE OF THE TYPICAL DESIGN SCOPE AND SHALL BE PERFORMED BY THE ENGINEER OF RECORD.

C. TYPICAL SUPPORT DESIGN IS BASED ON INTERNATIONAL BUILDING CODE (IBC) 2018. SEE TABLE-A FOR ALLOWABLE STRENGTH DESIGN LOADS (STATIC U.N.O.); GOVERNING LATERAL LOADS NOTED IN THE ALLOWABLE LOAD TABLE IS MAXIMUM OF 30% OF DEAD LOAD.

D. ALL LOADS ASSUMED TO ACT ON THE SUPPORT, NO ECCENTRICITY CONSIDERED

E. MAXIMUM ALLOWABLE LOADS NOTED IN TABLE-A ARE BASED ON THE GOVERNING COMBINATION OF VERTICAL LOAD WITH TRANSVERSE LOAD OR VERTICAL LOAD WITH LONGITUDINAL LOAD. A SEPARATE ANALYSIS MUST BE PERFORMED WHEN TRANSVERSE AND LONGITUDINAL LOAD OCCURS SIMULTANEOUSLY.

F. REFER TO HILTI INSTRUCTION FOR USE SHEET FOR REQUIRED INSTALLATION INFORMATION.

G. USE ½" DIA. HILT KWIK BOLT-TZ WITH MIN 3-5/8" EFFECTIVE EMBEDMENT. INSTALL ANCHOR PER ESR-1917 AND HILTI'S INSTRUCTIONS FOR USE AND RECOMMENDATIONS. MIN. CONCRETE COMPRESSIVE STRENGTH F'C= 3000 PSI, MIN. CONCRETE EDGE DISTANCE = 6", AND MIN. CONCRETE THICKNESS 6".

H. CONCRETE ANCHORS NOTED IN THE BILL OF MATERIAL ARE DESIGNED ONLY FOR WIND LATERAL LOADING. ENGINEER OF RECORD TO VERIFY ADEQUACY OF ANCHOR WHEN TYPICAL IS BEING USED FOR SEISMIC LATERAL LOADING.

TABLE A

	Max H, in	24	36	48
ALLOWABLE LOADS, lbs	Vertical (P)	1700	750	380
	Transverse	510	225	115
	Longitudinal	510	225	115

All loading and design criteria supplied by customer is assumed accurate. Only the stated Design Assumptions were considered, and must be verified by the responsible Engineer of Record (EOR). The basis of Hilti component and connection design is the published data in the current Hilti Technical Guide, including material and cross-section properties, allowable load values, factors of safety, methods of calculation, and limiting factors. The EOR must verify suitability for any specific application, and the capacity of the supportive structure to receive the shown configuration and associated reaction loads. Modification to components and/or design may alter performance and must be evaluated by the EOR.

REVISION HISTORY

NO:	DESCRIPTION:	DATE:
A	ISSUE FOR REVIEW	12/11/2020

PROJECT NAME:
STANCHION_MT70_C_001

PROJECT DESCRIPTION:
STANCHION_MT70_C_001

DRAWN:	CHECKED:	DESIGNED:	REVIEWED:
MDH	GAB	JDR	BVD

PAPER SIZE: ANSI B

PROJECT NUMBER:

PROJECT	JOB	SHEET
-	ST7C1 -	1

BIM 360://Hilti - MT Typicals/ST7C1.rvt

MARK	ITEM NO.	DESCRIPTION	QTY.
1	2268365	MT-70 L OC	1
2	2272101	MT-B-GS O4U OC	1
3	2272084	MT-TFB OC	6
4	2194341	X-BT-MR W10/15 SN 8	4
5	2273697	MT-EC-70	1

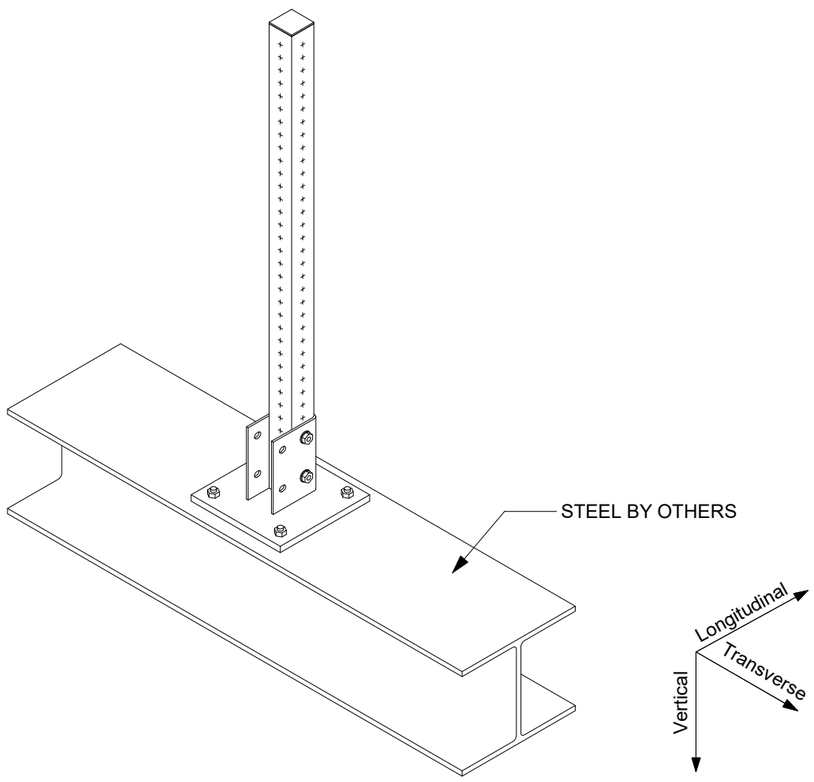

1 ISOMETRIC
N.T.S.

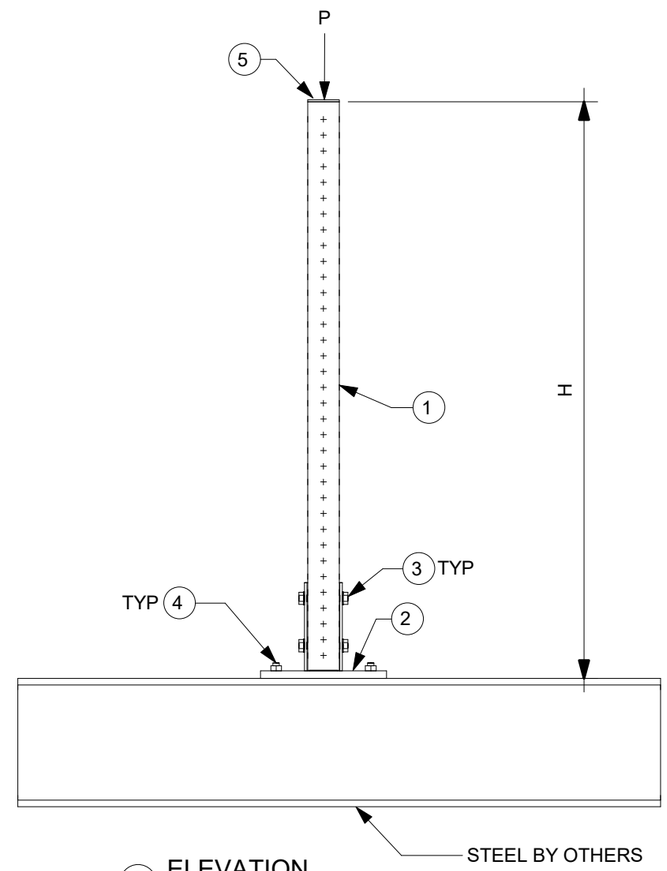

2 ELEVATION
N.T.S.

NOTE(S):

A. THE TYPICAL SUPPORT IS LOAD RATED AND DIMENSIONALLY LIMITED BASED ON DESIGN METHODOLOGY AND GENERIC NON-PROJECT SPECIFIC ASSUMPTIONS SET FORTH IN PROFIS MODULAR SUPPORTS ENGINEERING SOFTWARE. THE ENGINEER OF RECORD SHALL EVALUATE THIS TYPICAL SUPPORT TO DETERMINE ITS SUITABILITY FOR THE ACTUAL PROJECT SPECIFIC DESIGN CRITERIA AND REQUIREMENTS.

B. THE EVALUATION OF EXISTING STRUCTURE IS OUTSIDE OF THE TYPICAL DESIGN SCOPE AND SHALL BE PERFORMED BY THE ENGINEER OF RECORD.

C. TYPICAL SUPPORT DESIGN IS BASED ON INTERNATIONAL BUILDING CODE (IBC) 2018. SEE TABLE-A FOR ALLOWABLE STRENGTH DESIGN LOADS (STATIC U.N.O.); GOVERNING LATERAL LOADS NOTED IN THE ALLOWABLE LOAD TABLE IS MAXIMUM OF 30% OF DEAD LOAD.

D. ALL LOADS ASSUMED TO ACT ON THE SUPPORT, NO ECCENTRICITY CONSIDERED.

E. MAXIMUM ALLOWABLE LOADS NOTED IN TABLE-A ARE BASED ON THE GOVERNING COMBINATION OF VERTICAL LOAD WITH TRANSVERSE LOAD OR VERTICAL LOAD WITH LONGITUDINAL LOAD. A SEPARATE ANALYSIS MUST BE PERFORMED WHEN TRANSVERSE AND LONGITUDINAL LOAD OCCURS SIMULTANEOUSLY.

F. REFER TO HILTI INSTRUCTION FOR USE SHEET FOR REQUIRED INSTALLATION INFORMATION. THREAD FORMING BOLT MAY BE INSTALLED USING A TORQUE WRENCH OR SI-AT-A22 PER INSTRUCTION FOR USE.

G. X-BT REQUIREMENT: MIN. STEEL BASE MATERIAL THICKNESS SHALL BE 5/16". MIN EDGE DISTANCE SHALL BE 3/8". MIN YIELD STRENGTH OF STEEL SHALL BE FY=36KSI.

TABLE A

	Max H, in	24	36	48
ALLOWABLE LOADS, lbs	Vertical (P)	1600	750	380
	Transverse	480	225	115
	Longitudinal	480	225	115

All loading and design criteria supplied by customer is assumed accurate. Only the stated Design Assumptions were considered, and must be verified by the responsible Engineer of Record (EOR). The basis of Hilti component and connection design is the published data in the current Hilti Technical Guide, including material and cross-section properties, allowable load values, factors of safety, methods of calculation, and limiting factors. The EOR must verify suitability for any specific application, and the capacity of the supportive structure to receive the shown configuration and associated reaction loads. Modification to components and/or design may alter performance and must be evaluated by the EOR.

REVISION HISTORY

NO:	DESCRIPTION:	DATE:
A	ISSUE FOR REVIEW	12/11/2020

PROJECT NAME:
STANCHION_MT70_S_001

PROJECT DESCRIPTION:
STANCHION_MT70_S_001

DRAWN:	CHECKED:	DESIGNED:	REVIEWED:
MDH	GAB	JDR	BVD

PAPER SIZE: ANSI B

PROJECT NUMBER:

PROJECT	JOB	SHEET
-	ST7S1 -	1

BIM 360://Hilti - MT Typicals/ST7S1.rvt

MARK	ITEM NO.	DESCRIPTION	QTY.
1	2268365	MT-70 L OC	1
2	2268365	MT-70 L OC	1
3	2272101	MT-B-GS O4U OC	1
4	2272074	MT-C-GSP T OC	2
5	2272084	MT-TFB OC	14
6	387527	ANCHOR KB-TZ 1/2" x 4-1/2" SS304	4
7	2273697	MT-EC-70	2

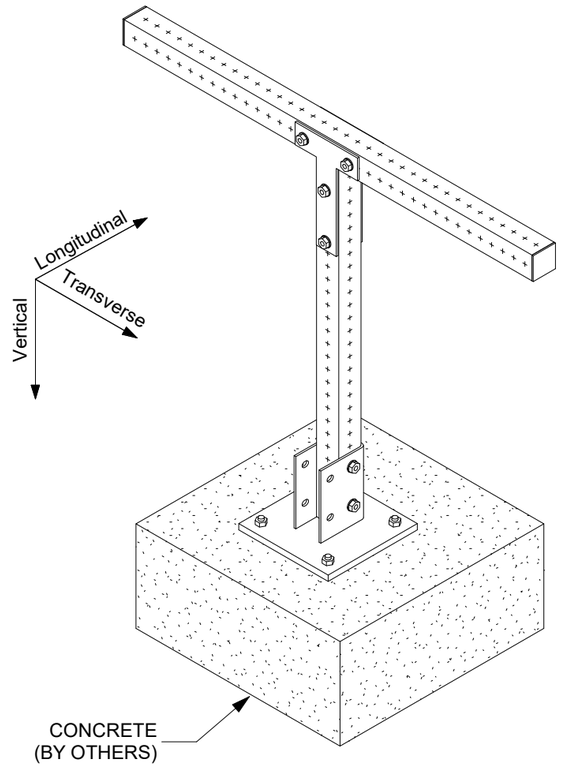

1 ISOMETRIC
N.T.S.

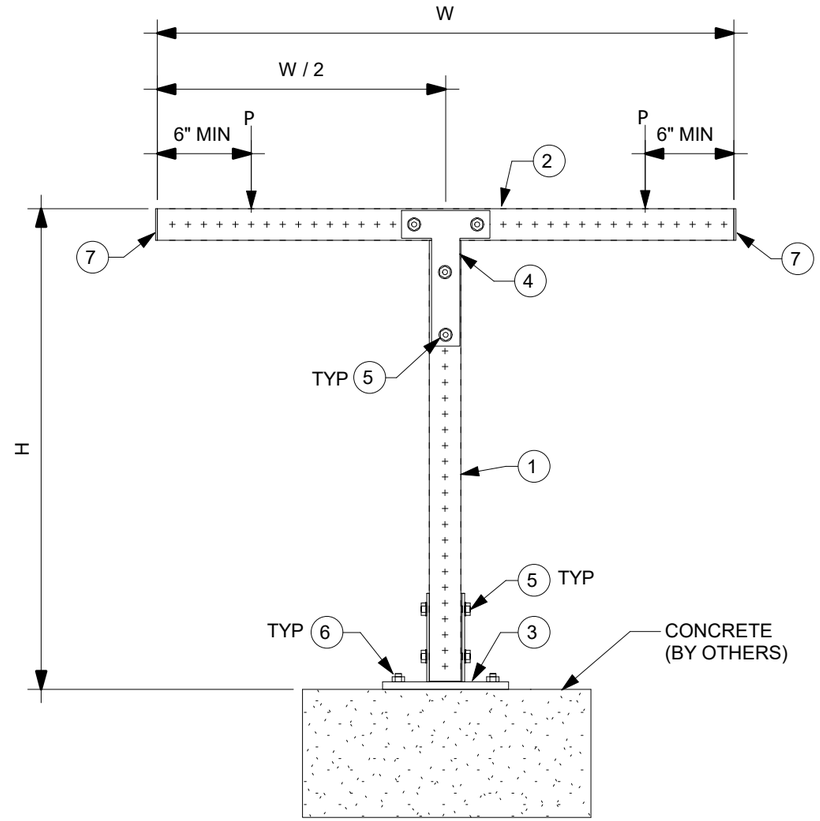

2 ELEVATION
N.T.S.

NOTE(S):

A. THE TYPICAL SUPPORT IS LOAD RATED AND DIMENSIONALLY LIMITED BASED ON DESIGN METHODOLOGY AND GENERIC NON-PROJECT SPECIFIC ASSUMPTIONS SET FORTH IN PROFIS MODULAR SUPPORTS ENGINEERING SOFTWARE. THE ENGINEER OF RECORD SHALL EVALUATE THIS TYPICAL SUPPORT TO DETERMINE ITS SUITABILITY FOR THE ACTUAL PROJECT SPECIFIC DESIGN CRITERIA AND REQUIREMENTS.

B. THE EVALUATION OF EXISTING STRUCTURE IS OUTSIDE OF THE TYPICAL DESIGN SCOPE AND SHALL BE PERFORMED BY THE ENGINEER OF RECORD.

C. TYPICAL SUPPORT DESIGN IS BASED ON INTERNATIONAL BUILDING CODE (IBC) 2018. SEE TABLE-A FOR ALLOWABLE STRENGTH DESIGN LOADS (STATIC U.N.O.); GOVERNING LATERAL LOADS NOTED IN THE ALLOWABLE LOAD TABLE IS MAXIMUM OF 30% OF DEAD LOAD.

D. ALL LOADS ASSUMED TO ACT ON THE SUPPORT, NO ECCENTRICITY CONSIDERED

E. MAXIMUM ALLOWABLE LOADS NOTED IN TABLE-A ARE BASED ON THE GOVERNING COMBINATION OF VERTICAL LOAD WITH TRANSVERSE LOAD OR VERTICAL LOAD WITH LONGITUDINAL LOAD EQUAL DISTANCE FROM END. A SEPARATE ANALYSIS MUST BE PERFORMED WHEN TRANSVERSE AND LONGITUDINAL LOAD OCCURS SIMULTANEOUSLY.

F. REFER TO HILTI INSTRUCTION FOR USE SHEET FOR REQUIRED INSTALLATION INFORMATION.

G. USE ½" DIA. HILT KWIK BOLT-TZ WITH MIN 3-5/8" EFFECTIVE EMBEDMENT. INSTALL ANCHOR PER ESR-1917 AND HILTI'S INSTRUCTIONS FOR USE AND RECOMMENDATIONS. MIN. CONCRETE COMPRESSIVE STRENGTH F'C= 3000 PSI, MIN. CONCRETE EDGE DISTANCE = 6", AND MIN. CONCRETE THICKNESS 6".

H. CONCRETE ANCHORS NOTED IN THE BILL OF MATERIAL ARE DESIGNED ONLY FOR WIND LATERAL LOADING. ENGINEER OF RECORD TO VERIFY ADEQUACY OF ANCHOR WHEN TYPICAL IS BEING USED FOR SEISMIC LATERAL LOADING.

TABLE A				
	Max H, in	24	36	48
	Max W, in	24	36	48
ALLOWABLE LOADS, lbs	Vertical (P)	375	160	90
	Transverse	112	48	27
	Longitudinal	112	48	27

All loading and design criteria supplied by customer is assumed accurate. Only the stated Design Assumptions were considered, and must be verified by the responsible Engineer of Record (EOR). The basis of Hilti component and connection design is the published data in the current Hilti Technical Guide, including material and cross-section properties, allowable load values, factors of safety, methods of calculation, and limiting factors. The EOR must verify suitability for any specific application, and the capacity of the supportive structure to receive the shown configuration and associated reaction loads. Modification to components and/or design may alter performance and must be evaluated by the EOR.

REVISION HISTORY

NO:	DESCRIPTION:	DATE:
A	ISSUE FOR REVIEW	09/21/2020
B	ISSUE FOR REVIEW	12/14/2020

PROJECT NAME:
T-POST MT70 C 001

PROJECT DESCRIPTION:
T-POST MT70 C 001

DRAWN:	CHECKED:	DESIGNED:	REVIEWED:
GAB	IDP	JDR	BVD

PAPER SIZE: ANSI B

PROJECT NUMBER: PROJECT - JOB TP7C1 - SHEET 1

BIM 360://Hilti - MT Typicals/TP7C1.rvt

MARK	ITEM NO.	DESCRIPTION	QTY.
1	2268365	MT-70 L OC	1
2	2268365	MT-70 L OC	1
3	2272101	MT-B-GS O4U OC	1
4	2272074	MT-C-GSP T OC	2
5	2272084	MT-TFB OC	14
6	387527	ANCHOR KB-TZ 1/2" x 4-1/2" SS304	4
7	2273697	MT-EC-70	2

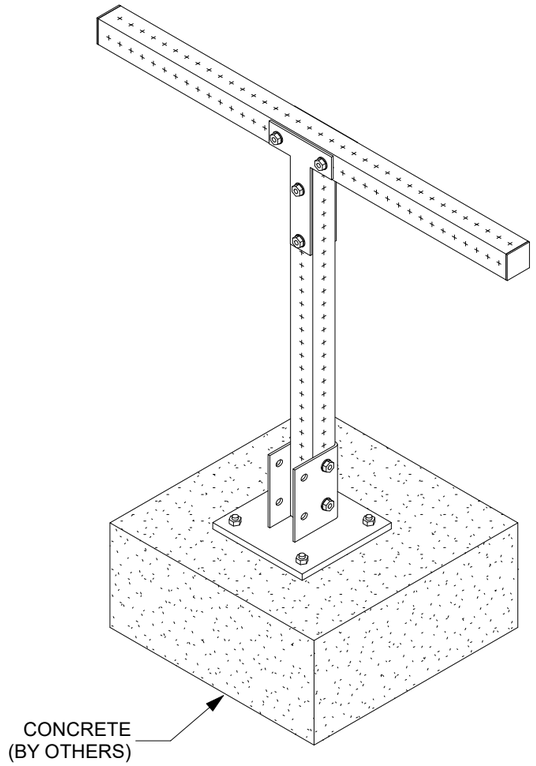

1 ISOMETRIC
N.T.S.

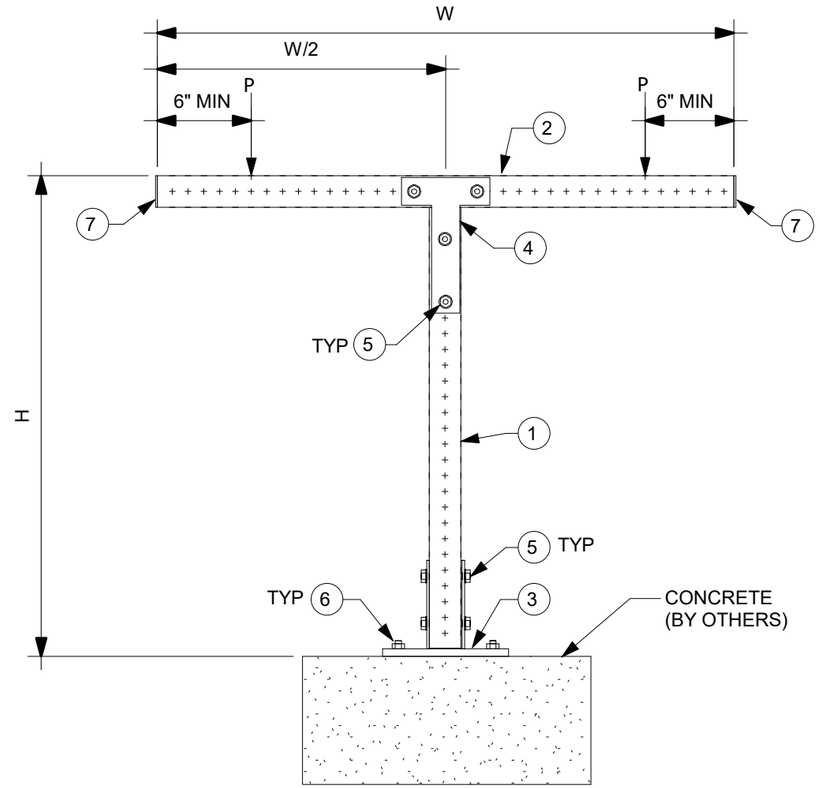

2 ELEVATION
N.T.S.

NOTE(S):

A. THE TYPICAL SUPPORT IS LOAD RATED AND DIMENSIONALLY LIMITED BASED ON DESIGN METHODOLOGY AND GENERIC NON-PROJECT SPECIFIC ASSUMPTIONS SET FORTH IN PROFIS MODULAR SUPPORTS ENGINEERING SOFTWARE. THE ENGINEER OF RECORD SHALL EVALUATE THIS TYPICAL SUPPORT TO DETERMINE ITS SUITABILITY FOR THE ACTUAL PROJECT SPECIFIC DESIGN CRITERIA AND REQUIREMENTS.

B. THE EVALUATION OF EXISTING STRUCTURE IS OUTSIDE OF THE TYPICAL DESIGN SCOPE AND SHALL BE PERFORMED BY THE ENGINEER OF RECORD.

C. TYPICAL SUPPORT DESIGN IS BASED ON INTERNATIONAL BUILDING CODE (IBC) 2018. SEE TABLE-A FOR ALLOWABLE STRENGTH DESIGN LOADS (STATIC U.N.O.); GOVERNING LATERAL LOADS NOTED IN THE ALLOWABLE LOAD TABLE IS MAXIMUM OF 30% OF DEAD LOAD OR WIND LOADING BASED ON WIND CRITERIA NOTED ON WIND DESIGN BASIS SHEET.

D. ALL LOADS ASSUMED TO ACT ON THE SUPPORT, NO ECCENTRICITY CONSIDERED

E. MAXIMUM ALLOWABLE LOADS NOTED IN TABLE-A ARE BASED ON THE GOVERNING COMBINATION OF VERTICAL LOAD WITH TRANSVERSE LOAD OR VERTICAL LOAD WITH LONGITUDINAL LOAD EQUAL DISTANCE FROM END. A SEPARATE ANALYSIS MUST BE PERFORMED WHEN TRANSVERSE AND LONGITUDINAL LOAD OCCURS SIMULTANEOUSLY.

F. REFER TO HILTI INSTRUCTION FOR USE SHEET FOR REQUIRED INSTALLATION INFORMATION.

G. USE ½" DIA. HILT KWIK BOLT-TZ WITH MIN 3-5/8" EFFECTIVE EMBEDMENT. INSTALL ANCHOR PER ESR-1917 AND HILTI'S INSTRUCTIONS FOR USE AND RECOMMENDATIONS. MIN. CONCRETE COMPRESSIVE STRENGTH F'C= 3000 PSI, MIN. CONCRETE EDGE DISTANCE = 6", AND MIN. CONCRETE THICKNESS 6".

H. CONCRETE ANCHORS NOTED IN THE BILL OF MATERIAL ARE DESIGNED ONLY FOR WIND LATERAL LOADING. ENGINEER OF RECORD TO VERIFY ADEQUACY OF ANCHOR WHEN TYPICAL IS BEING USED FOR SEISMIC LATERAL LOADING.

TABLE A				
	Max H, in	24	36	48
	Max W, in	24	36	48
ALLOWABLE LOADS, lbs	Vertical (P)	375	160	90
	Transverse	112	48	27
	Longitudinal	112	48	27

All loading and design criteria supplied by customer is assumed accurate. Only the stated Design Assumptions were considered, and must be verified by the responsible Engineer of Record (EOR). The basis of Hilti component and connection design is the published data in the current Hilti Technical Guide, including material and cross-section properties, allowable load values, factors of safety, methods of calculation, and limiting factors. The EOR must verify suitability for any specific application, and the capacity of the supportive structure to receive the shown configuration and associated reaction loads. Modification to components and/or design may alter performance and must be evaluated by the EOR.

REVISION HISTORY

NO:	DESCRIPTION:	DATE:
A	ISSUE FOR REVIEW	09/21/2020

PROJECT NAME:
T-POST MT70 C 001

PROJECT DESCRIPTION:
T-POST MT70 C 001

DRAWN:	CHECKED:	DESIGNED:	REVIEWED:
GAB	IDP	JDR	BVD

PAPER SIZE: ANSI B

PROJECT NUMBER: PROJECT - JOB TP7C2 - SHEET 1

BIM 360://Hilti - MT Typicals/TP7C2.rvt

MARK	ITEM NO.	DESCRIPTION	QTY.
1	2268365	MT-70 L OC	1
2	2268365	MT-70 L OC	1
3	2272101	MT-B-GS O4U OC	1
4	2272074	MT-C-GSP T OC	2
5	2272084	MT-TFB OC	14
6	2194341	X-BT-MR W10/15 SN 8	4
7	2273697	MT-EC-70	2

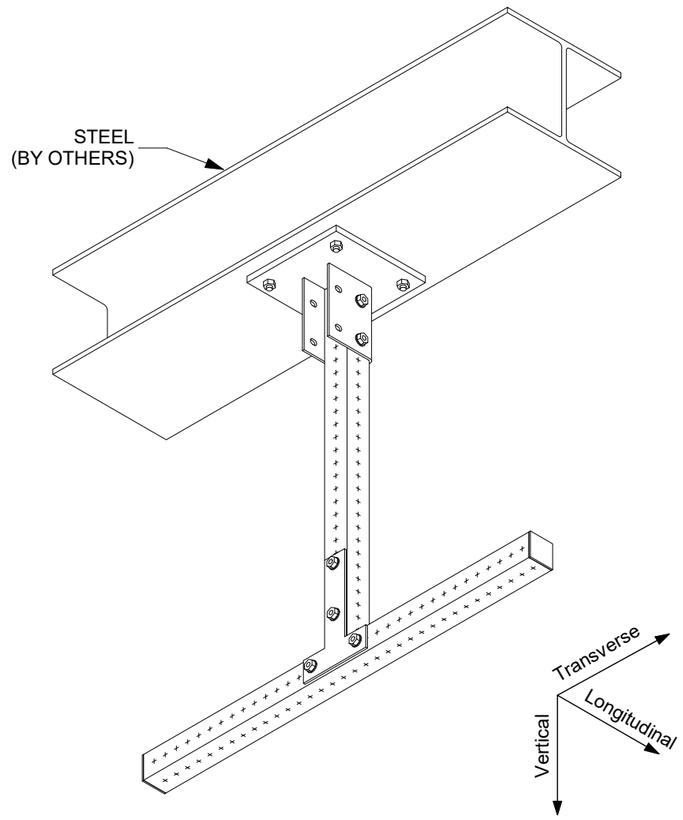

1 ISOMETRIC
N.T.S.

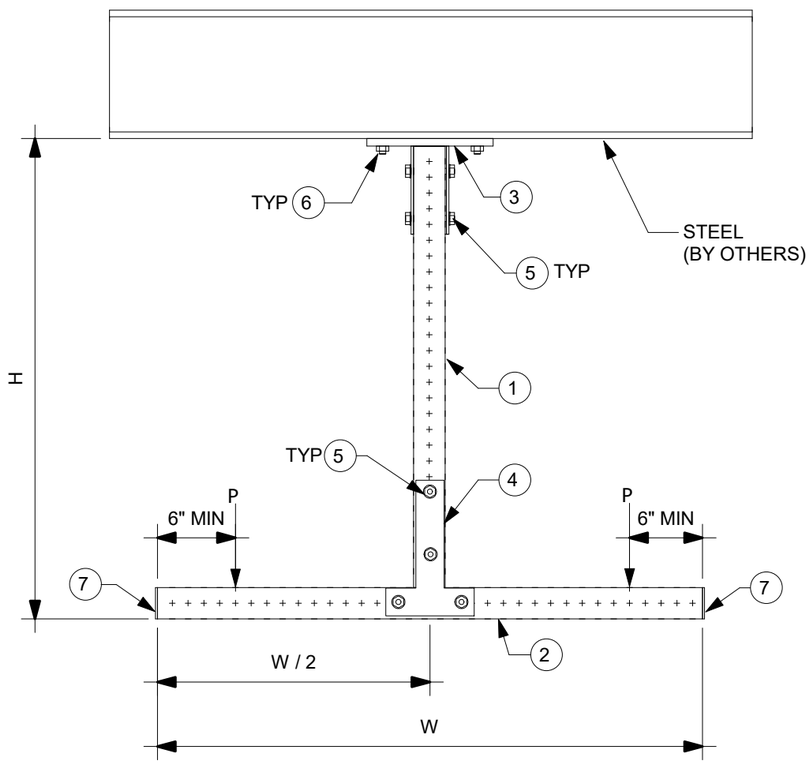

2 ELEVATION
N.T.S.

NOTE(S):

A. THE TYPICAL SUPPORT IS LOAD RATED AND DIMENSIONALLY LIMITED BASED ON DESIGN METHODOLOGY AND GENERIC NON-PROJECT SPECIFIC ASSUMPTIONS SET FORTH IN PROFIS MODULAR SUPPORTS ENGINEERING SOFTWARE. THE ENGINEER OF RECORD SHALL EVALUATE THIS TYPICAL SUPPORT TO DETERMINE ITS SUITABILITY FOR THE ACTUAL PROJECT SPECIFIC DESIGN CRITERIA AND REQUIREMENTS.

B. THE EVALUATION OF EXISTING STRUCTURE IS OUTSIDE OF THE TYPICAL DESIGN SCOPE AND SHALL BE PERFORMED BY THE ENGINEER OF RECORD.

C. TYPICAL SUPPORT DESIGN IS BASED ON INTERNATIONAL BUILDING CODE (IBC) 2018. SEE TABLE-A FOR ALLOWABLE STRENGTH DESIGN LOADS (STATIC U.N.O.); GOVERNING LATERAL LOADS NOTED IN THE ALLOWABLE LOAD TABLE IS MAXIMUM OF 30% OF DEAD LOAD.

D. ALL LOADS ASSUMED TO ACT ON THE SUPPORT, NO ECCENTRICITY CONSIDERED.

E. MAXIMUM ALLOWABLE LOADS NOTED IN TABLE-A ARE BASED ON THE GOVERNING COMBINATION OF VERTICAL LOAD WITH TRANSVERSE LOAD OR VERTICAL LOAD WITH LONGITUDINAL LOAD EQUAL DISTANCE FROM END. A SEPARATE ANALYSIS MUST BE PERFORMED WHEN TRANSVERSE AND LONGITUDINAL LOAD OCCURS SIMULTANEOUSLY.

F. REFER TO HILTI INSTRUCTION FOR USE SHEET FOR REQUIRED INSTALLATION INFORMATION. THREAD FORMING BOLT MAY BE INSTALLED USING A TORQUE WRENCH OR SI-AT-A22 PER INSTRUCTION FOR USE.

G. X-BT REQUIREMENT: MIN. STEEL BASE MATERIAL THICKNESS SHALL BE 5/16". MIN EDGE DISTANCE SHALL BE 3/8". MIN YIELD STRENGTH OF STEEL SHALL BE FY=36KSI.

TABLE A

	Max H, in	24	36	48
	Max W, in	24	36	48
ALLOWABLE LOADS, lbs	Vertical (P)	350	160	90
	Transverse	105	48	27
	Longitudinal	105	48	27

All loading and design criteria supplied by customer is assumed accurate. Only the stated Design Assumptions were considered, and must be verified by the responsible Engineer of Record (EOR). The basis of Hilti component and connection design is the published data in the current Hilti Technical Guide, including material and cross-section properties, allowable load values, factors of safety, methods of calculation, and limiting factors. The EOR must verify suitability for any specific application, and the capacity of the supportive structure to receive the shown configuration and associated reaction loads. Modification to components and/or design may alter performance and must be evaluated by the EOR.

REVISION HISTORY

NO:	DESCRIPTION:	DATE:
A	ISSUE FOR REVIEW	09/21/2020
B	ISSUE FOR REVIEW	12/14/2020

PROJECT NAME:
T-POST MT70 S 001

PROJECT DESCRIPTION:
T-POST MT70 S 001

DRAWN:	CHECKED:	DESIGNED:	REVIEWED:
GAB	IDP	JDR	BVD

PAPER SIZE: ANSI B

PROJECT NUMBER:

PROJECT	JOB	SHEET
	- TP7S1 -	1

BIM 360://Hilti - MT Typicals/TP7S1.rvt

MARK	ITEM NO.	DESCRIPTION	QTY.
1	2268365	MT-70 L OC	1
2	2268365	MT-70 L OC	1
3	2272101	MT-B-GS O4U OC	1
4	2272074	MT-C-GSP T OC	2
5	2272084	MT-TFB OC	14
6	2194341	X-BT-MR W10/15 SN 8	4
7	2273697	MT-EC-70	2

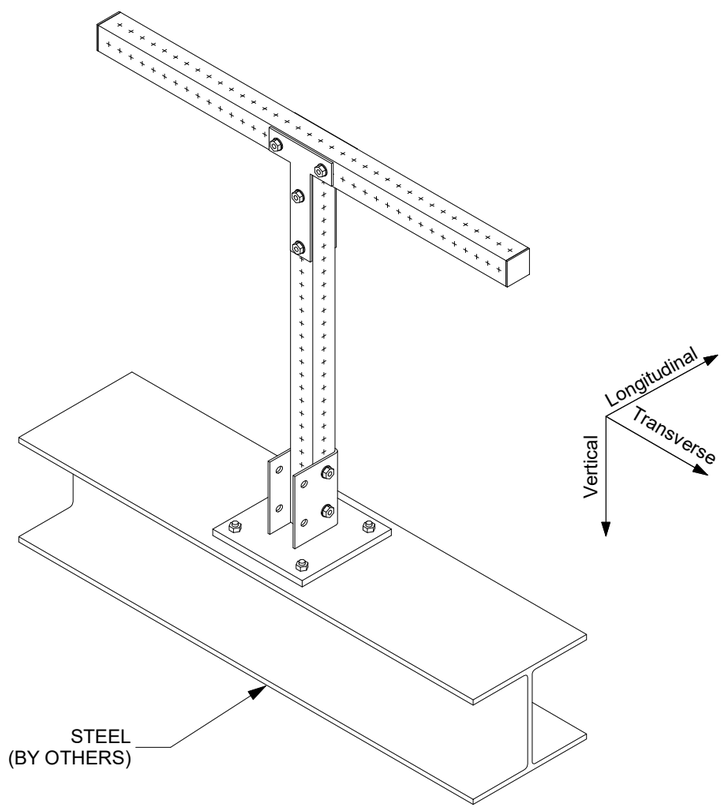

1 ISOMETRIC
N.T.S.

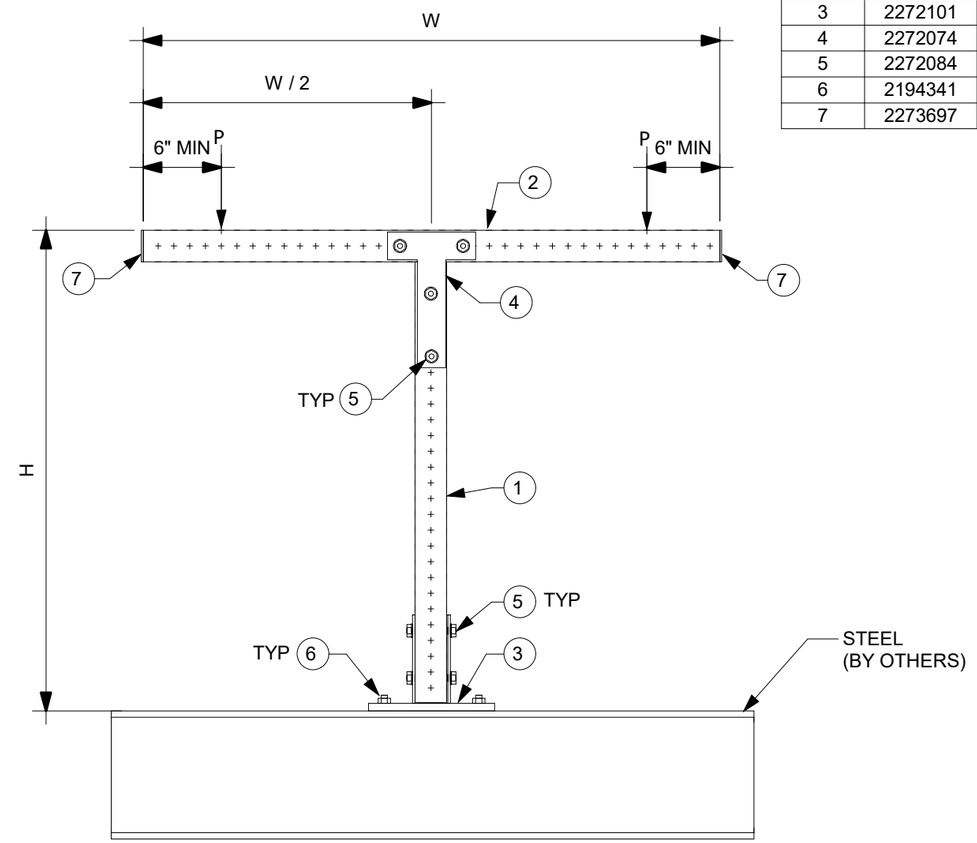

2 ELEVATION
N.T.S.

NOTE(S):

A. THE TYPICAL SUPPORT IS LOAD RATED AND DIMENSIONALLY LIMITED BASED ON DESIGN METHODOLOGY AND GENERIC NON-PROJECT SPECIFIC ASSUMPTIONS SET FORTH IN PROFIS MODULAR SUPPORTS ENGINEERING SOFTWARE. THE ENGINEER OF RECORD SHALL EVALUATE THIS TYPICAL SUPPORT TO DETERMINE ITS SUITABILITY FOR THE ACTUAL PROJECT SPECIFIC DESIGN CRITERIA AND REQUIREMENTS.

B. THE EVALUATION OF EXISTING STRUCTURE IS OUTSIDE OF THE TYPICAL DESIGN SCOPE AND SHALL BE PERFORMED BY THE ENGINEER OF RECORD.

C. TYPICAL SUPPORT DESIGN IS BASED ON INTERNATIONAL BUILDING CODE (IBC) 2018. SEE TABLE-A FOR ALLOWABLE STRENGTH DESIGN LOADS (STATIC U.N.O.); GOVERNING LATERAL LOADS NOTED IN THE ALLOWABLE LOAD TABLE IS MAXIMUM OF 30% OF DEAD LOAD.

D. ALL LOADS ASSUMED TO ACT ON THE SUPPORT, NO ECCENTRICITY CONSIDERED.

E. MAXIMUM ALLOWABLE LOADS NOTED IN TABLE-A ARE BASED ON THE GOVERNING COMBINATION OF VERTICAL LOAD WITH TRANSVERSE LOAD OR VERTICAL LOAD WITH LONGITUDINAL LOAD EQUAL DISTANCE FROM END. A SEPARATE ANALYSIS MUST BE PERFORMED WHEN TRANSVERSE AND LONGITUDINAL LOAD OCCURS SIMULTANEOUSLY.

F. REFER TO HILTI INSTRUCTION FOR USE SHEET FOR REQUIRED INSTALLATION INFORMATION. THREAD FORMING BOLT MAY BE INSTALLED USING A TORQUE WRENCH OR SI-AT-A22 PER INSTRUCTION FOR USE.

G. X-BT REQUIREMENT: MIN. STEEL BASE MATERIAL THICKNESS SHALL BE 5/16". MIN EDGE DISTANCE SHALL BE 3/8". MIN YIELD STRENGTH OF STEEL SHALL BE FY=36KSI.

TABLE A				
	Max H, in	24	36	48
	Max W, in	24	36	48
ALLOWABLE LOADS, lbs	Vertical (P)	375	160	90
	Transverse	112	48	27
	Longitudinal	112	48	27

All loading and design criteria supplied by customer is assumed accurate. Only the stated Design Assumptions were considered, and must be verified by the responsible Engineer of Record (EOR). The basis of Hilti component and connection design is the published data in the current Hilti Technical Guide, including material and cross-section properties, allowable load values, factors of safety, methods of calculation, and limiting factors. The EOR must verify suitability for any specific application, and the capacity of the supportive structure to receive the shown configuration and associated reaction loads. Modification to components and/or design may alter performance and must be evaluated by the EOR.

REVISION HISTORY

NO:	DESCRIPTION:	DATE:
A	ISSUE FOR REVIEW	09/21/2020
B	ISSUE FOR REVIEW	12/14/2020

PROJECT NAME:
T-POST MT70 S 002

PROJECT DESCRIPTION:
T-POST MT70 S 002

DRAWN:	CHECKED:	DESIGNED:	REVIEWED:
GAB	IDP	JDR	BVD

PAPER SIZE: ANSI B

PROJECT NUMBER: PROJECT - JOB TP7S2 - SHEET 1

BIM 360://Hilti - MT Typicals/TP7S2.rvt

MARK	ITEM NO.	DESCRIPTION	QTY.
1	2268367	MT-80 L OC	1
2	2268367	MT-80 L OC	1
3	2272101	MT-B-GS O4U OC	1
4	2272075	MT-C-GLP T OC	2
5	2272084	MT-TFB OC	26
6	387527	ANCHOR KB-TZ 1/2" x 4-1/2" SS304	4
7	2273698	MT-EC-80	2

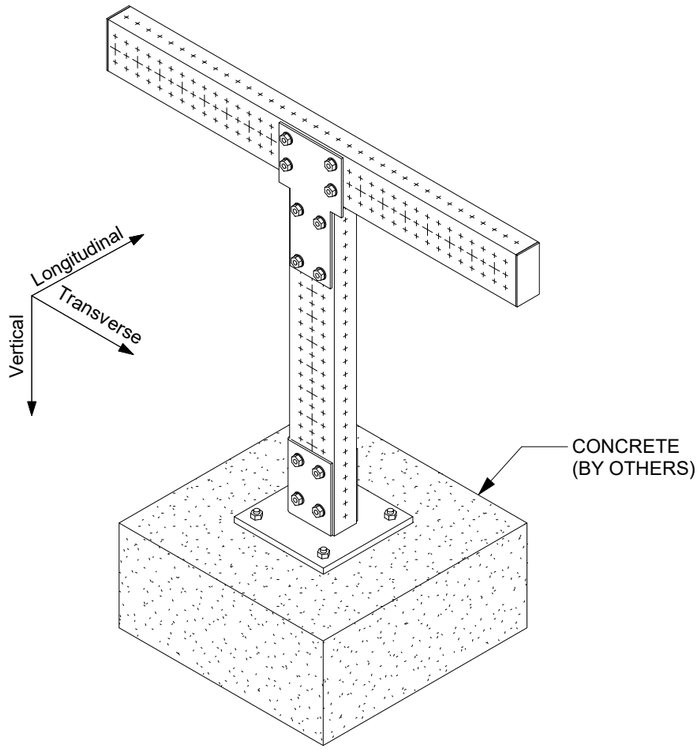

1 ISOMETRIC
N.T.S.

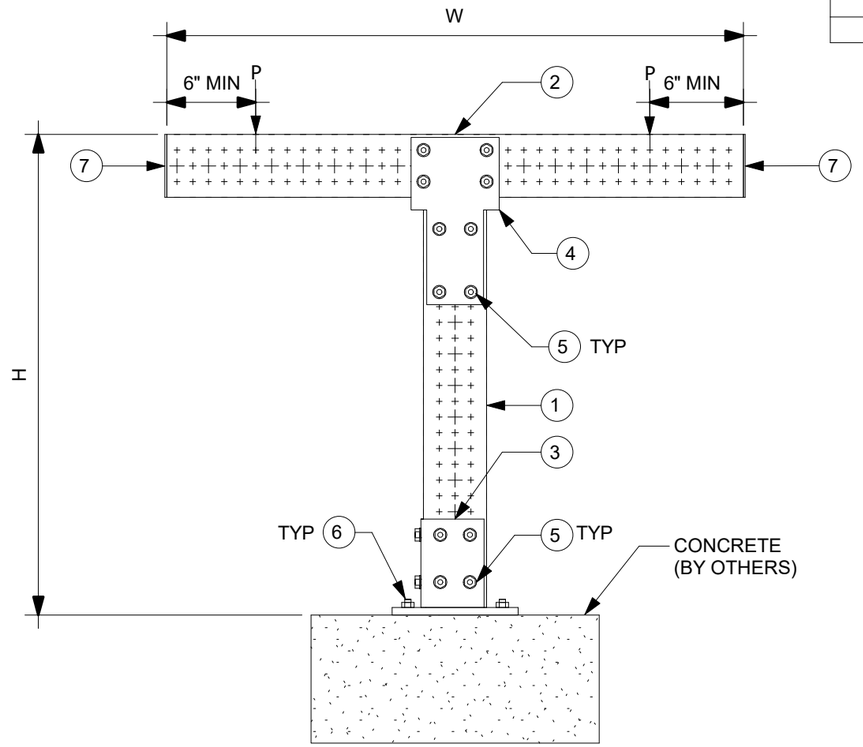

2 ELEVATION
N.T.S.

NOTE(S):

A. THE TYPICAL SUPPORT IS LOAD RATED AND DIMENSIONALLY LIMITED BASED ON DESIGN METHODOLOGY AND GENERIC NON-PROJECT SPECIFIC ASSUMPTIONS SET FORTH IN PROFIS MODULAR SUPPORTS ENGINEERING SOFTWARE. THE ENGINEER OF RECORD SHALL EVALUATE THIS TYPICAL SUPPORT TO DETERMINE ITS SUITABILITY FOR THE ACTUAL PROJECT SPECIFIC DESIGN CRITERIA AND REQUIREMENTS.

B. THE EVALUATION OF EXISTING STRUCTURE IS OUTSIDE OF THE TYPICAL DESIGN SCOPE AND SHALL BE PERFORMED BY THE ENGINEER OF RECORD.

C. TYPICAL SUPPORT DESIGN IS BASED ON INTERNATIONAL BUILDING CODE (IBC) 2018. SEE TABLE-A FOR ALLOWABLE STRENGTH DESIGN LOADS (STATIC U.N.O.); GOVERNING LATERAL LOADS NOTED IN THE ALLOWABLE LOAD TABLE IS MAXIMUM OF 30% OF DEAD LOAD.

D. ALL LOADS ASSUMED TO ACT ON THE SUPPORT, NO ECCENTRICITY CONSIDERED

E. MAXIMUM ALLOWABLE LOADS NOTED IN TABLE-A ARE BASED ON THE GOVERNING COMBINATION OF VERTICAL LOAD WITH TRANSVERSE LOAD OR VERTICAL LOAD WITH LONGITUDINAL LOAD EQUAL DISTANCE FROM END. A SEPARATE ANALYSIS MUST BE PERFORMED WHEN TRANSVERSE AND LONGITUDINAL LOAD OCCURS SIMULTANEOUSLY.

F. REFER TO HILTI INSTRUCTION FOR USE SHEET FOR REQUIRED INSTALLATION INFORMATION.

G. USE ½" DIA. HILT KWIK BOLT-TZ WITH MIN 3-5/8" EFFECTIVE EMBEDMENT. INSTALL ANCHOR PER ESR-1917 AND HILTI'S INSTRUCTIONS FOR USE AND RECOMMENDATIONS. MIN. CONCRETE COMPRESSIVE STRENGTH F'C= 3000 PSI, MIN. CONCRETE EDGE DISTANCE = 6", AND MIN. CONCRETE THICKNESS 6".

H. CONCRETE ANCHORS NOTED IN THE BILL OF MATERIAL ARE DESIGNED ONLY FOR WIND LATERAL LOADING. ENGINEER OF RECORD TO VERIFY ADEQUACY OF ANCHOR WHEN TYPICAL IS BEING USED FOR SEISMIC LATERAL LOADING.

TABLE A				
	Max H, in	24	36	48
	Max W, in	24	36	48
ALLOWABLE LOADS, lbs	Vertical (P)	925	420	240
	Transverse	278	210	72
	Longitudinal	278	210	72

All loading and design criteria supplied by customer is assumed accurate. Only the stated Design Assumptions were considered, and must be verified by the responsible Engineer of Record (EOR). The basis of Hilti component and connection design is the published data in the current Hilti Technical Guide, including material and cross-section properties, allowable load values, factors of safety, methods of calculation, and limiting factors. The EOR must verify suitability for any specific application, and the capacity of the supportive structure to receive the shown configuration and associated reaction loads. Modification to components and/or design may alter performance and must be evaluated by the EOR.

REVISION HISTORY

NO:	DESCRIPTION:	DATE:
A	ISSUE FOR REVIEW	12/11/2020

PROJECT NAME:
T-POST MT80 C 001

PROJECT DESCRIPTION:
T-POST MT80 C 001

DRAWN:	CHECKED:	DESIGNED:	REVIEWED:
MDH	IDP	JDR	BVD

PAPER SIZE: ANSI B

PROJECT NUMBER: PROJECT - JOB TP8C1 - SHEET 1

BIM 360://Hilti - MT Typicals/TP8C1.rvt

MARK	ITEM NO.	DESCRIPTION	QTY.
1	2268367	MT-80 L OC	1
2	2268367	MT-80 L OC	1
3	2272101	MT-B-GS O4U OC	1
4	2272075	MT-C-GLP T OC	2
5	2272084	MT-TFB OC	26
6	2194341	X-BT-MR W10/15 SN 8	4
7	2273698	MT-EC-80	2

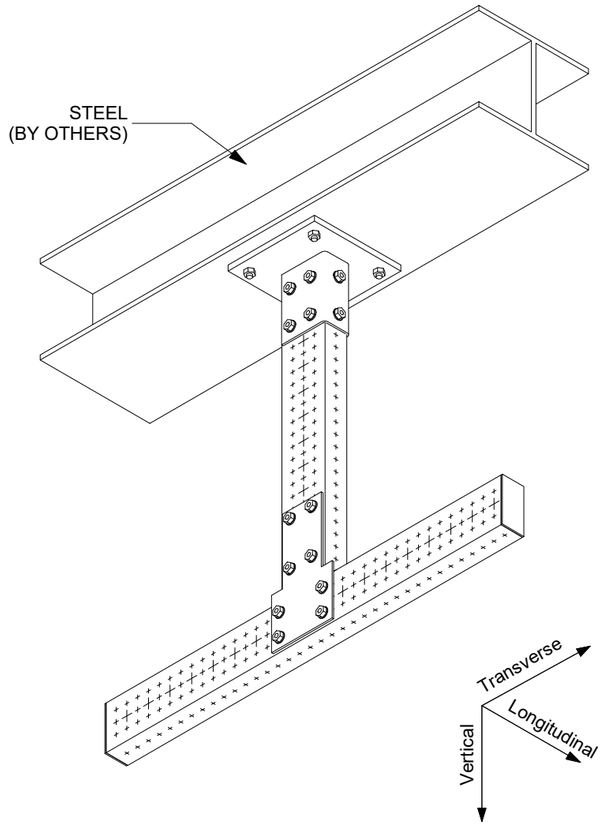

1 ISOMETRIC
N.T.S.

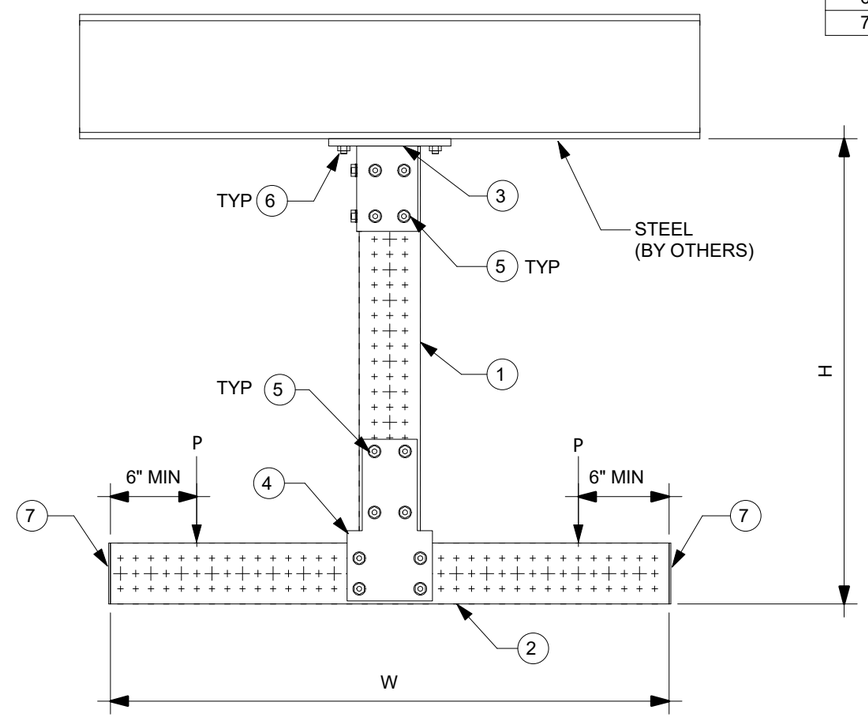

2 ELEVATION
N.T.S.

NOTE(S):

A. THE TYPICAL SUPPORT IS LOAD RATED AND DIMENSIONALLY LIMITED BASED ON DESIGN METHODOLOGY AND GENERIC NON-PROJECT SPECIFIC ASSUMPTIONS SET FORTH IN PROFIS MODULAR SUPPORTS ENGINEERING SOFTWARE. THE ENGINEER OF RECORD SHALL EVALUATE THIS TYPICAL SUPPORT TO DETERMINE ITS SUITABILITY FOR THE ACTUAL PROJECT SPECIFIC DESIGN CRITERIA AND REQUIREMENTS.

B. THE EVALUATION OF EXISTING STRUCTURE IS OUTSIDE OF THE TYPICAL DESIGN SCOPE AND SHALL BE PERFORMED BY THE ENGINEER OF RECORD.

C. TYPICAL SUPPORT DESIGN IS BASED ON INTERNATIONAL BUILDING CODE (IBC) 2018. SEE TABLE-A FOR ALLOWABLE STRENGTH DESIGN LOADS (STATIC U.N.O.); GOVERNING LATERAL LOADS NOTED IN THE ALLOWABLE LOAD TABLE IS MAXIMUM OF 30% OF DEAD LOAD.

D. ALL LOADS ASSUMED TO ACT ON THE SUPPORT, NO ECCENTRICITY CONSIDERED.

E. MAXIMUM ALLOWABLE LOADS NOTED IN TABLE-A ARE BASED ON THE GOVERNING COMBINATION OF VERTICAL LOAD WITH TRANSVERSE LOAD OR VERTICAL LOAD WITH LONGITUDINAL LOAD EQUAL DISTANCE FROM END. A SEPARATE ANALYSIS MUST BE PERFORMED WHEN TRANSVERSE AND LONGITUDINAL LOAD OCCURS SIMULTANEOUSLY.

F. REFER TO HILTI INSTRUCTION FOR USE SHEET FOR REQUIRED INSTALLATION INFORMATION. THREAD FORMING BOLT MAY BE INSTALLED USING A TORQUE WRENCH OR SI-AT-A22 PER INSTRUCTION FOR USE.

G. X-BT REQUIREMENT: MIN. STEEL BASE MATERIAL THICKNESS SHALL BE 5/16". MIN EDGE DISTANCE SHALL BE 3/8". MIN YIELD STRENGTH OF STEEL SHALL BE FY=36KSI.

TABLE A

	Max H, in	24	36	48
	Max W, in	24	36	48
ALLOWABLE LOADS, lbs	Vertical (P)	800	300	240
	Transverse	240	90	72
	Longitudinal	240	90	72

All loading and design criteria supplied by customer is assumed accurate. Only the stated Design Assumptions were considered, and must be verified by the responsible Engineer of Record (EOR). The basis of Hilti component and connection design is the published data in the current Hilti Technical Guide, including material and cross-section properties, allowable load values, factors of safety, methods of calculation, and limiting factors. The EOR must verify suitability for any specific application, and the capacity of the supportive structure to receive the shown configuration and associated reaction loads. Modification to components and/or design may alter performance and must be evaluated by the EOR.

REVISION HISTORY

NO:	DESCRIPTION:	DATE:
A	ISSUE FOR REVIEW	12/11/2020

PROJECT NAME:
T-POST MT80 S 001

PROJECT DESCRIPTION:
T-POST MT80 S 001

DRAWN:	CHECKED:	DESIGNED:	REVIEWED:
MDH	IDP	JDR	BVD

PAPER SIZE: ANSI B

PROJECT NUMBER: PROJECT - JOB TP8S1 - SHEET 1

BIM 360://Hilti - MT Typicals/TP8S1.rvt

MARK	ITEM NO.	DESCRIPTION	QTY.
1	2268367	MT-80 L OC	1
2	2268367	MT-80 L OC	1
3	2272101	MT-B-GS O4U OC	1
4	2272075	MT-C-GLP T OC	2
5	2272084	MT-TFB OC	26
6	2194341	X-BT-MR W10/15 SN 8	4
7	2273698	MT-EC-80	2

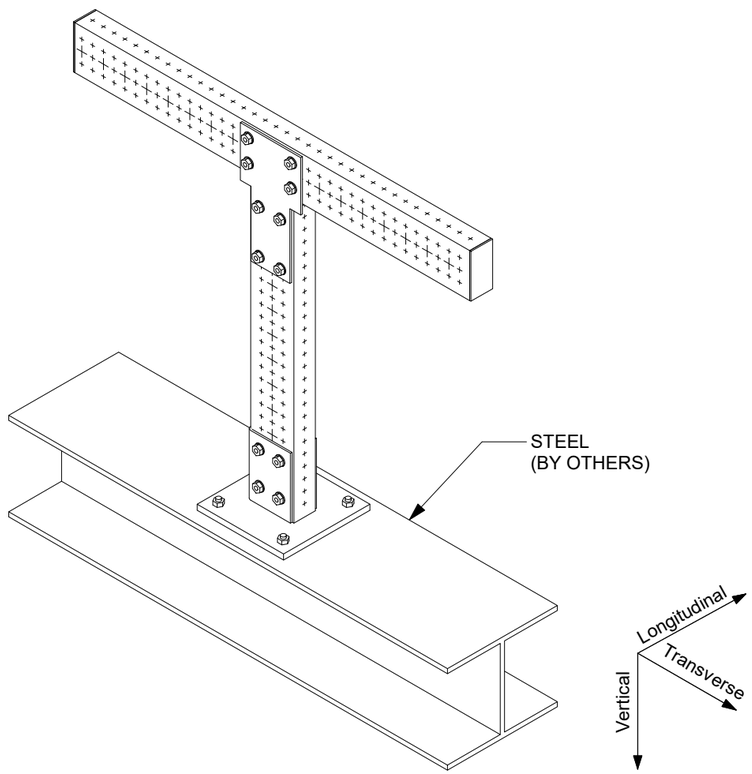

1 ISOMETRIC
N.T.S.

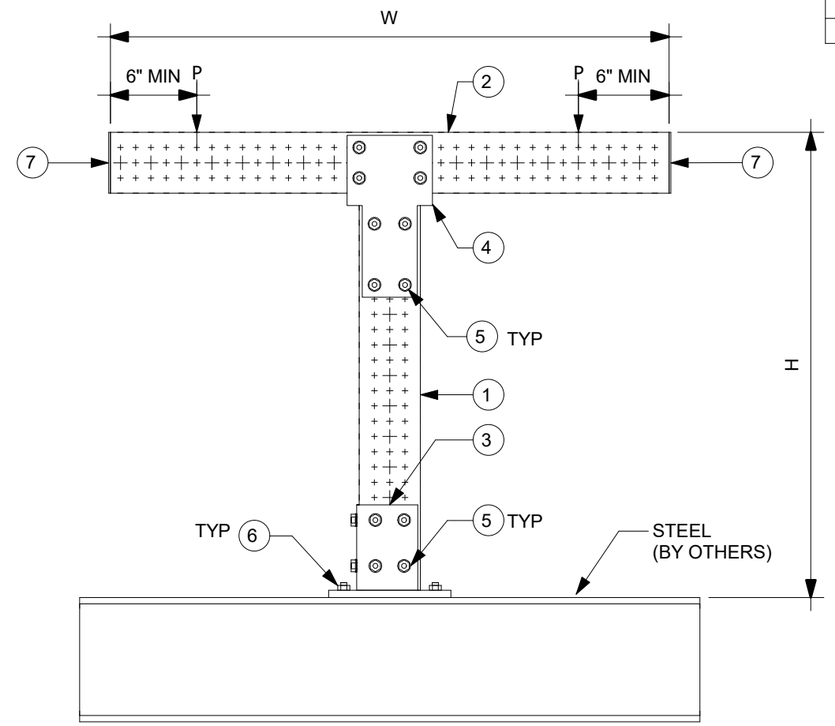

2 ELEVATION
N.T.S.

NOTE(S):

A. THE TYPICAL SUPPORT IS LOAD RATED AND DIMENSIONALLY LIMITED BASED ON DESIGN METHODOLOGY AND GENERIC NON-PROJECT SPECIFIC ASSUMPTIONS SET FORTH IN PROFIS MODULAR SUPPORTS ENGINEERING SOFTWARE. THE ENGINEER OF RECORD SHALL EVALUATE THIS TYPICAL SUPPORT TO DETERMINE ITS SUITABILITY FOR THE ACTUAL PROJECT SPECIFIC DESIGN CRITERIA AND REQUIREMENTS.

B. THE EVALUATION OF EXISTING STRUCTURE IS OUTSIDE OF THE TYPICAL DESIGN SCOPE AND SHALL BE PERFORMED BY THE ENGINEER OF RECORD.

C. TYPICAL SUPPORT DESIGN IS BASED ON INTERNATIONAL BUILDING CODE (IBC) 2018. SEE TABLE-A FOR ALLOWABLE STRENGTH DESIGN LOADS (STATIC U.N.O.); GOVERNING LATERAL LOADS NOTED IN THE ALLOWABLE LOAD TABLE IS MAXIMUM OF 30% OF DEAD LOAD.

D. ALL LOADS ASSUMED TO ACT ON THE SUPPORT, NO ECCENTRICITY CONSIDERED.

E. MAXIMUM ALLOWABLE LOADS NOTED IN TABLE-A ARE BASED ON THE GOVERNING COMBINATION OF VERTICAL LOAD WITH TRANSVERSE LOAD OR VERTICAL LOAD WITH LONGITUDINAL LOAD EQUAL DISTANCE FROM END. A SEPARATE ANALYSIS MUST BE PERFORMED WHEN TRANSVERSE AND LONGITUDINAL LOAD OCCURS SIMULTANEOUSLY.

F. REFER TO HILTI INSTRUCTION FOR USE SHEET FOR REQUIRED INSTALLATION INFORMATION. THREAD FORMING BOLT MAY BE INSTALLED USING A TORQUE WRENCH OR SI-AT-A22 PER INSTRUCTION FOR USE.

G. X-BT REQUIREMENT: MIN. STEEL BASE MATERIAL THICKNESS SHALL BE 5/16". MIN EDGE DISTANCE SHALL BE 3/8". MIN YIELD STRENGTH OF STEEL SHALL BE FY=36KSI.

TABLE A

	Max H, in	24	36	48
	Max W, in	24	36	48
ALLOWABLE LOADS, lbs	Vertical (P)	925	420	240
	Transverse	278	210	72
	Longitudinal	278	210	72

All loading and design criteria supplied by customer is assumed accurate. Only the stated Design Assumptions were considered, and must be verified by the responsible Engineer of Record (EOR). The basis of Hilti component and connection design is the published data in the current Hilti Technical Guide, including material and cross-section properties, allowable load values, factors of safety, methods of calculation, and limiting factors. The EOR must verify suitability for any specific application, and the capacity of the supportive structure to receive the shown configuration and associated reaction loads. Modification to components and/or design may alter performance and must be evaluated by the EOR.

REVISION HISTORY

NO:	DESCRIPTION:	DATE:
A	ISSUE FOR REVIEW	12/11/2020

PROJECT NAME:
T-POST MT80 S 002

PROJECT DESCRIPTION:
T-POST MT80 S 002

DRAWN:	CHECKED:	DESIGNED:	REVIEWED:
MDH	IDP	JDR	BVD

PAPER SIZE: ANSI B

PROJECT NUMBER: PROJECT - JOB TP8S2 - SHEET 1

BIM 360://Hilti - MT Typicals/TP8S2.rvt

MARK	ITEM NO.	DESCRIPTION	QTY.
1	2268365	MT-70 L OC	1
2	2268365	MT-70 L OC	1
3	2272101	MT-B-GS O4U OC	2
4	2272073	MT-C-GSP L OC	2
5	2272084	MT-TFB OC	20
6	387527	ANCHOR KB-TZ 1/2" x 4-1/2" SS304	8
7	2273697	MT-EC-70	1

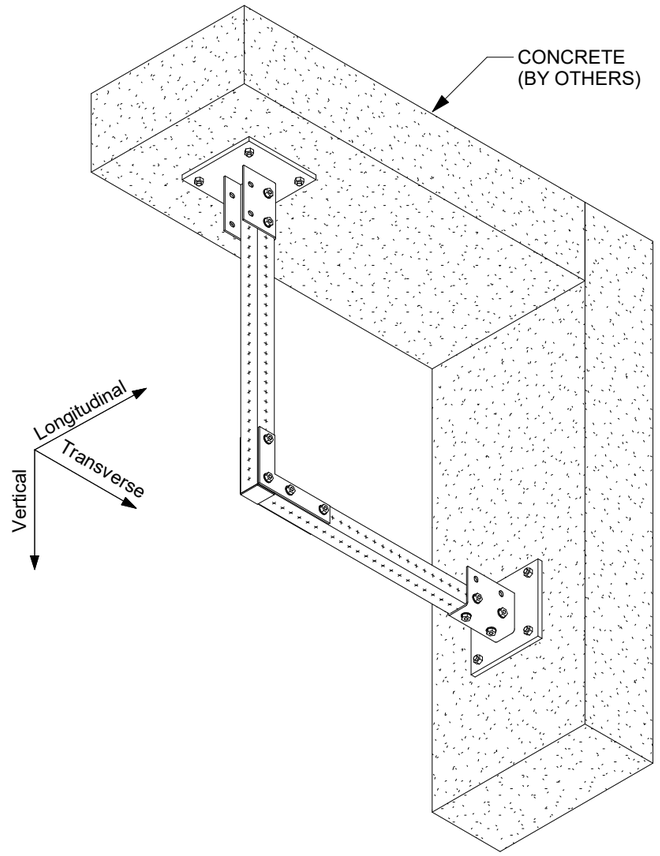

1 ISOMETRIC
N.T.S.

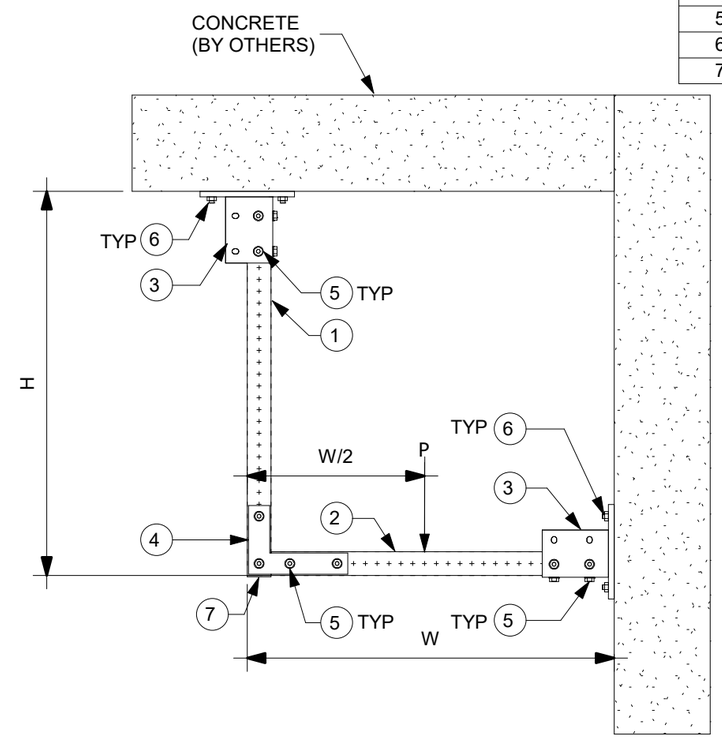

2 ELEVATION
N.T.S.

NOTE(S):

A. THE TYPICAL SUPPORT IS LOAD RATED AND DIMENSIONALLY LIMITED BASED ON DESIGN METHODOLOGY AND GENERIC NON-PROJECT SPECIFIC ASSUMPTIONS SET FORTH IN PROFIS MODULAR SUPPORTS ENGINEERING SOFTWARE. THE ENGINEER OF RECORD SHALL EVALUATE THIS TYPICAL SUPPORT TO DETERMINE ITS SUITABILITY FOR THE ACTUAL PROJECT SPECIFIC DESIGN CRITERIA AND REQUIREMENTS.

B. THE EVALUATION OF EXISTING STRUCTURE IS OUTSIDE OF THE TYPICAL DESIGN SCOPE AND SHALL BE PERFORMED BY THE ENGINEER OF RECORD.

C. TYPICAL SUPPORT DESIGN IS BASED ON INTERNATIONAL BUILDING CODE (IBC) 2018. SEE TABLE-A FOR ALLOWABLE STRENGTH DESIGN LOADS (STATIC U.N.O.); GOVERNING LATERAL LOADS NOTED IN THE ALLOWABLE LOAD TABLE IS MAXIMUM OF 30% OF DEAD LOAD.

D. ALL LOADS ASSUMED TO ACT ON THE SUPPORT, NO ECCENTRICITY CONSIDERED

E. MAXIMUM ALLOWABLE LOADS NOTED IN TABLE-A ARE BASED ON THE GOVERNING COMBINATION OF VERTICAL LOAD WITH TRANSVERSE LOAD OR VERTICAL LOAD WITH LONGITUDINAL LOAD. A SEPARATE ANALYSIS MUST BE PERFORMED WHEN TRANSVERSE AND LONGITUDINAL LOAD OCCURS SIMULTANEOUSLY.

F. REFER TO HILTI INSTRUCTION FOR USE SHEET FOR REQUIRED INSTALLATION INFORMATION.

G. USE ½" DIA. HILT KWIK BOLT-TZ WITH MIN 3-5/8" EFFECTIVE EMBEDMENT. INSTALL ANCHOR PER ESR-1917 AND HILTI'S INSTRUCTIONS FOR USE AND RECOMMENDATIONS. MIN. CONCRETE COMPRESSIVE STRENGTH F'C= 3000 PSI, MIN. CONCRETE EDGE DISTANCE = 6", AND MIN. CONCRETE THICKNESS 6".

H. CONCRETE ANCHORS NOTED IN THE BILL OF MATERIAL ARE DESIGNED ONLY FOR WIND LATERAL LOADING. ENGINEER OF RECORD TO VERIFY ADEQUACY OF ANCHOR WHEN TYPICAL IS BEING USED FOR SEISMIC LATERAL LOADING.

TABLE A

	Max H, in	24	36	48
	Max W, in	24	36	48
ALLOWABLE LOADS, lbs	Vertical (P)	1575	1050	800
	Transverse	472	315	240
	Longitudinal	472	315	240

All loading and design criteria supplied by customer is assumed accurate. Only the stated Design Assumptions were considered, and must be verified by the responsible Engineer of Record (EOR). The basis of Hilti component and connection design is the published data in the current Hilti Technical Guide, including material and cross-section properties, allowable load values, factors of safety, methods of calculation, and limiting factors. The EOR must verify suitability for any specific application, and the capacity of the supportive structure to receive the shown configuration and associated reaction loads. Modification to components and/or design may alter performance and must be evaluated by the EOR.

REVISION HISTORY

NO:	DESCRIPTION:	DATE:
A	ISSUE FOR REVIEW	12/11/2020

PROJECT NAME:
TRAPEZE MT70 C 001

PROJECT DESCRIPTION:
TRAPEZE MT70 C 001

DRAWN:	CHECKED:	DESIGNED:	REVIEWED:
GAB	IDP	JDR	BVD

PAPER SIZE: ANSI B

PROJECT NUMBER: - TR7C1 - 1

BIM 360://Hilti - MT Typicals/TR7C1.rvt

MARK	ITEM NO.	DESCRIPTION	QTY.
1	2268365	MT-70 L OC	2
2	2268365	MT-70 L OC	1
3	2272101	MT-B-GS O4U OC	2
4	2272073	MT-C-GSP L OC	4
5	2272084	MT-TFB OC	28
6	2273697	MT-EC-70	2
7	387527	ANCHOR KB-TZ 1/2" x 4-1/2" SS304	8

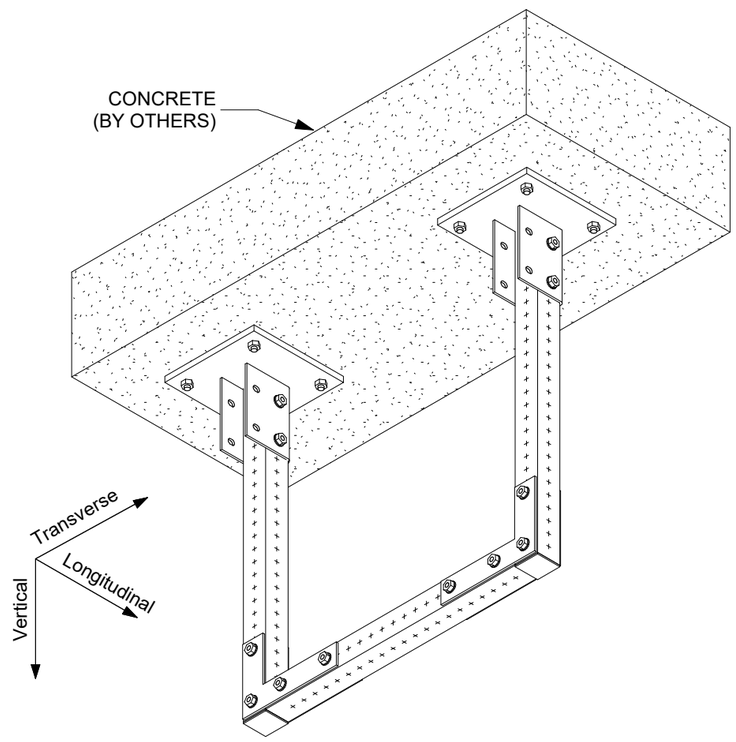

1 ISOMETRIC
N.T.S.

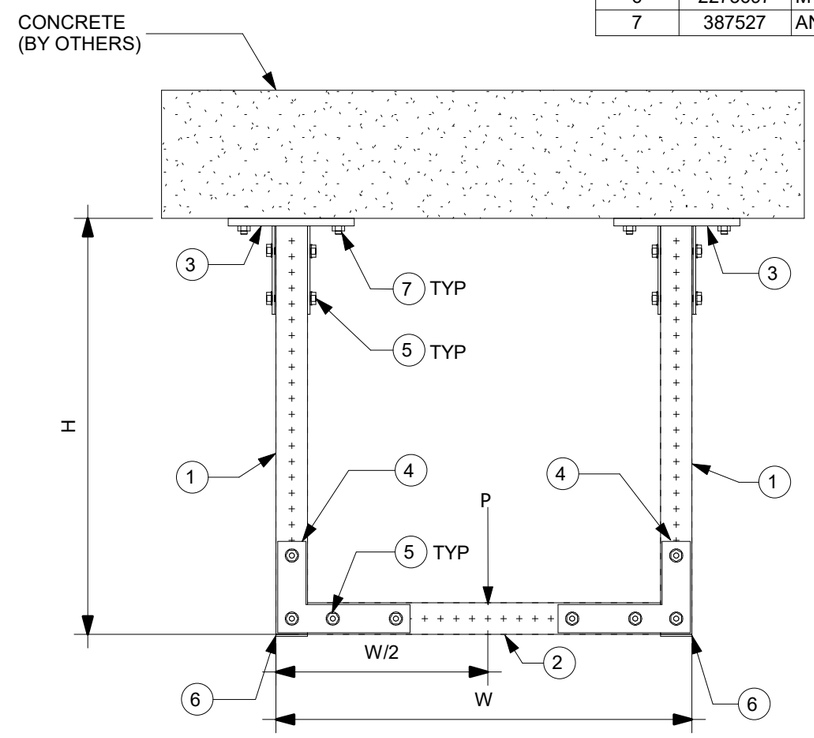

2 ELEVATION
N.T.S.

NOTE(S):

A. THE TYPICAL SUPPORT IS LOAD RATED AND DIMENSIONALLY LIMITED BASED ON DESIGN METHODOLOGY AND GENERIC NON-PROJECT SPECIFIC ASSUMPTIONS SET FORTH IN PROFIS MODULAR SUPPORTS ENGINEERING SOFTWARE. THE ENGINEER OF RECORD SHALL EVALUATE THIS TYPICAL SUPPORT TO DETERMINE ITS SUITABILITY FOR THE ACTUAL PROJECT SPECIFIC DESIGN CRITERIA AND REQUIREMENTS.

B. THE EVALUATION OF EXISTING STRUCTURE IS OUTSIDE OF THE TYPICAL DESIGN SCOPE AND SHALL BE PERFORMED BY THE ENGINEER OF RECORD.

C. TYPICAL SUPPORT DESIGN IS BASED ON INTERNATIONAL BUILDING CODE (IBC) 2018. SEE TABLE-A FOR ALLOWABLE STRENGTH DESIGN LOADS (STATIC U.N.O.); GOVERNING LATERAL LOADS NOTED IN THE ALLOWABLE LOAD TABLE IS MAXIMUM OF 30% OF DEAD LOAD.

D. ALL LOADS ASSUMED TO ACT ON THE SUPPORT, NO ECCENTRICITY CONSIDERED

E. MAXIMUM ALLOWABLE LOADS NOTED IN TABLE-A ARE BASED ON THE GOVERNING COMBINATION OF VERTICAL LOAD WITH TRANSVERSE LOAD OR VERTICAL LOAD WITH LONGITUDINAL LOAD. A SEPARATE ANALYSIS MUST BE PERFORMED WHEN TRANSVERSE AND LONGITUDINAL LOAD OCCURS SIMULTANEOUSLY.

F. REFER TO HILTI INSTRUCTION FOR USE SHEET FOR REQUIRED INSTALLATION INFORMATION.

G. USE ½" DIA. HILT KWIK BOLT-TZ WITH MIN 3-5/8" EFFECTIVE EMBEDMENT. INSTALL ANCHOR PER ESR-1917 AND HILTI'S INSTRUCTIONS FOR USE AND RECOMMENDATIONS. MIN. CONCRETE COMPRESSIVE STRENGTH F'C= 3000 PSI, MIN. CONCRETE EDGE DISTANCE = 6", AND MIN. CONCRETE THICKNESS 6".

H. CONCRETE ANCHORS NOTED IN THE BILL OF MATERIAL ARE DESIGNED ONLY FOR WIND LATERAL LOADING. ENGINEER OF RECORD TO VERIFY ADEQUACY OF ANCHOR WHEN TYPICAL IS BEING USED FOR SEISMIC LATERAL LOADING.

TABLE A				
	Max H, in	24	36	48
	Max W, in	24	36	48
ALLOWABLE LOADS, lbs	Vertical (P)	1400	925	625
	Transverse	420	277	187
	Longitudinal	420	277	187

All loading and design criteria supplied by customer is assumed accurate. Only the stated Design Assumptions were considered, and must be verified by the responsible Engineer of Record (EOR). The basis of Hilti component and connection design is the published data in the current Hilti Technical Guide, including material and cross-section properties, allowable load values, factors of safety, methods of calculation, and limiting factors. The EOR must verify suitability for any specific application, and the capacity of the supportive structure to receive the shown configuration and associated reaction loads. Modification to components and/or design may alter performance and must be evaluated by the EOR.

REVISION HISTORY

NO:	DESCRIPTION:	DATE:
A	ISSUE FOR REVIEW	12/11/2020

PROJECT NAME:
TRAPEZE MT70 C 002

PROJECT DESCRIPTION:
TRAPEZE MT70 C 002

DRAWN:	CHECKED:	DESIGNED:	REVIEWED:
GAB	IDP	JDR	BVD

PAPER SIZE: ANSI B

PROJECT NUMBER:

PROJECT	JOB	SHEET
	- TR7C2 -	1

BIM 360://Hilti - MT Typicals/TR7C2.rvt

MARK	ITEM NO.	DESCRIPTION	QTY.
1	2268365	MT-70 L OC	2
2	2268365	MT-70 L OC	2
3	2272101	MT-B-GS O4U OC	2
4	2272073	MT-C-GSP L OC	8
5	2272084	MT-TFB OC	44
6	2273697	MT-EC-70	2
7	387527	ANCHOR KB-TZ 1/2" x 4-1/2" SS304	8

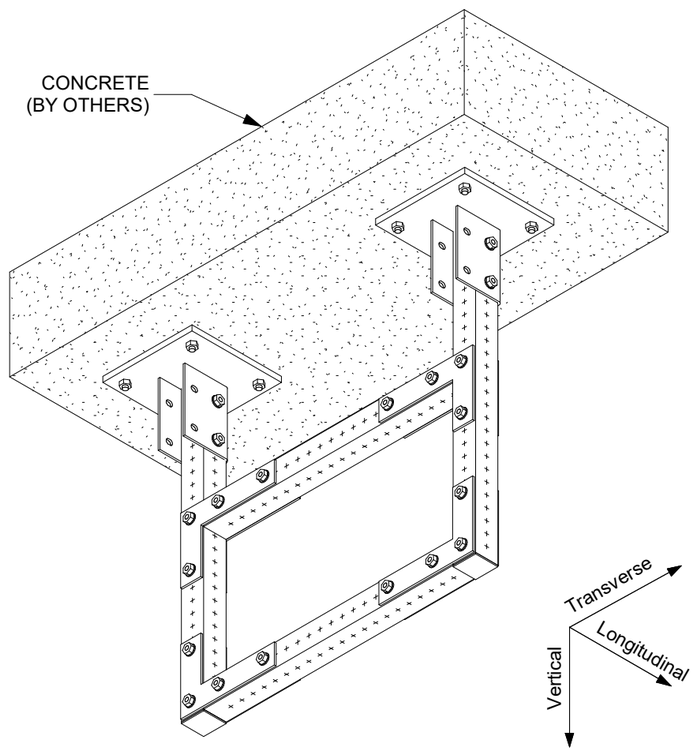

1 ISOMETRIC
N.T.S.

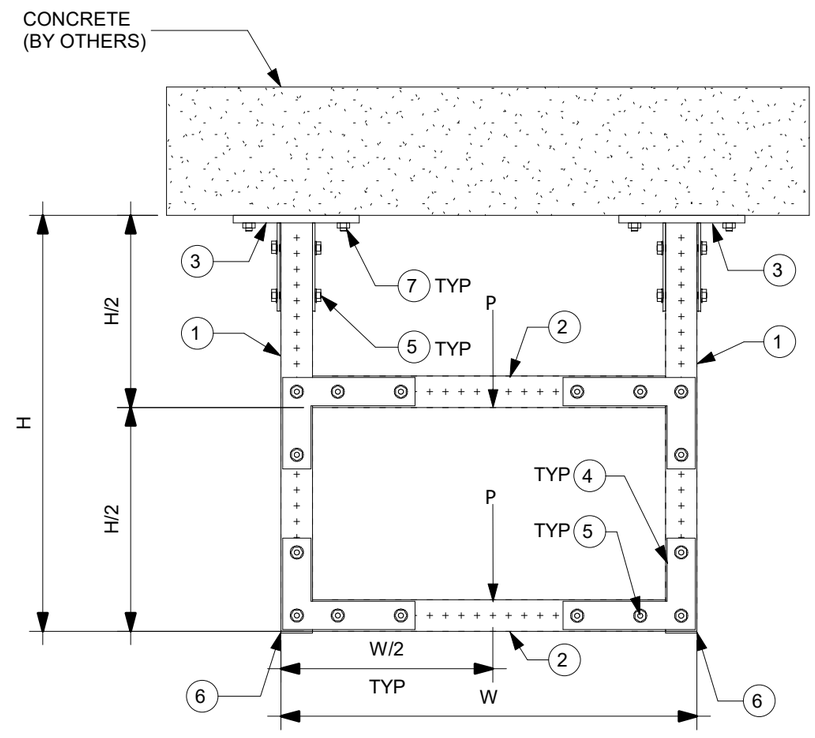

2 ELEVATION
N.T.S.

NOTE(S):

A. THE TYPICAL SUPPORT IS LOAD RATED AND DIMENSIONALLY LIMITED BASED ON DESIGN METHODOLOGY AND GENERIC NON-PROJECT SPECIFIC ASSUMPTIONS SET FORTH IN PROFIS MODULAR SUPPORTS ENGINEERING SOFTWARE. THE ENGINEER OF RECORD SHALL EVALUATE THIS TYPICAL SUPPORT TO DETERMINE ITS SUITABILITY FOR THE ACTUAL PROJECT SPECIFIC DESIGN CRITERIA AND REQUIREMENTS.

B. THE EVALUATION OF EXISTING STRUCTURE IS OUTSIDE OF THE TYPICAL DESIGN SCOPE AND SHALL BE PERFORMED BY THE ENGINEER OF RECORD.

C. TYPICAL SUPPORT DESIGN IS BASED ON INTERNATIONAL BUILDING CODE (IBC) 2018. SEE TABLE-A FOR ALLOWABLE STRENGTH DESIGN LOADS (STATIC U.N.O.); GOVERNING LATERAL LOADS NOTED IN THE ALLOWABLE LOAD TABLE IS MAXIMUM OF 30% OF DEAD LOAD.

D. ALL LOADS ASSUMED TO ACT ON THE SUPPORT, NO ECCENTRICITY CONSIDERED

E. MAXIMUM ALLOWABLE LOADS NOTED IN TABLE-A ARE BASED ON THE GOVERNING COMBINATION OF VERTICAL LOAD WITH TRANSVERSE LOAD OR VERTICAL LOAD WITH LONGITUDINAL LOAD. A SEPARATE ANALYSIS MUST BE PERFORMED WHEN TRANSVERSE AND LONGITUDINAL LOAD OCCURS SIMULTANEOUSLY.

F. REFER TO HILTI INSTRUCTION FOR USE SHEET FOR REQUIRED INSTALLATION INFORMATION.

G. USE ½" DIA. HILT KWIK BOLT-TZ WITH MIN 3-5/8" EFFECTIVE EMBEDMENT. INSTALL ANCHOR PER ESR-1917 AND HILTI'S INSTRUCTIONS FOR USE AND RECOMMENDATIONS. MIN. CONCRETE COMPRESSIVE STRENGTH F'C= 3000 PSI, MIN. CONCRETE EDGE DISTANCE = 6", AND MIN. CONCRETE THICKNESS 6".

H. CONCRETE ANCHORS NOTED IN THE BILL OF MATERIAL ARE DESIGNED ONLY FOR WIND LATERAL LOADING. ENGINEER OF RECORD TO VERIFY ADEQUACY OF ANCHOR WHEN TYPICAL IS BEING USED FOR SEISMIC LATERAL LOADING.

TABLE A				
	Max H, in	24	36	48
	Max W, in	24	36	48
ALLOWABLE LOADS, lbs	Vertical (P)	1400	850	475
	Transverse	420	255	145
	Longitudinal	420	255	145

All loading and design criteria supplied by customer is assumed accurate. Only the stated Design Assumptions were considered, and must be verified by the responsible Engineer of Record (EOR). The basis of Hilti component and connection design is the published data in the current Hilti Technical Guide, including material and cross-section properties, allowable load values, factors of safety, methods of calculation, and limiting factors. The EOR must verify suitability for any specific application, and the capacity of the supportive structure to receive the shown configuration and associated reaction loads. Modification to components and/or design may alter performance and must be evaluated by the EOR.

REVISION HISTORY

NO:	DESCRIPTION:	DATE:
A	ISSUE FOR REVIEW	12/14/2020

PROJECT NAME:
TRAPEZE MT70 C 003

PROJECT DESCRIPTION:
TRAPEZE MT70 C 003

DRAWN:	CHECKED:	DESIGNED:	REVIEWED:
MDH	GAB	JDR	BVD

PAPER SIZE: ANSI B

PROJECT NUMBER:

PROJECT	JOB	SHEET
-	TR7C3 -	1

BIM 360://Hilti - MT Typicals/TR7C3.rvt

MARK	ITEM NO.	DESCRIPTION	QTY.
1	2268365	MT-70 L OC	2
2	2268365	MT-70 L OC	3
3	2272101	MT-B-GS O4U OC	2
4	2272073	MT-C-GSP L OC	12
5	2272084	MT-TFB OC	60
6	2273697	MT-EC-70	2
7	387527	ANCHOR KB-TZ 1/2" x 4-1/2" SS304	8

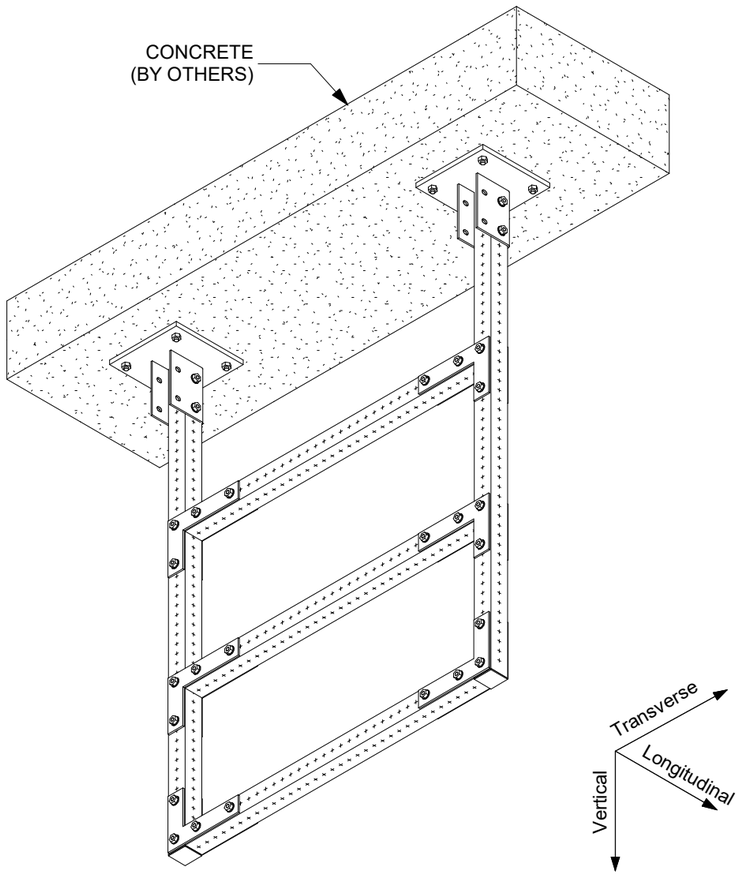

1 ISOMETRIC
N.T.S.

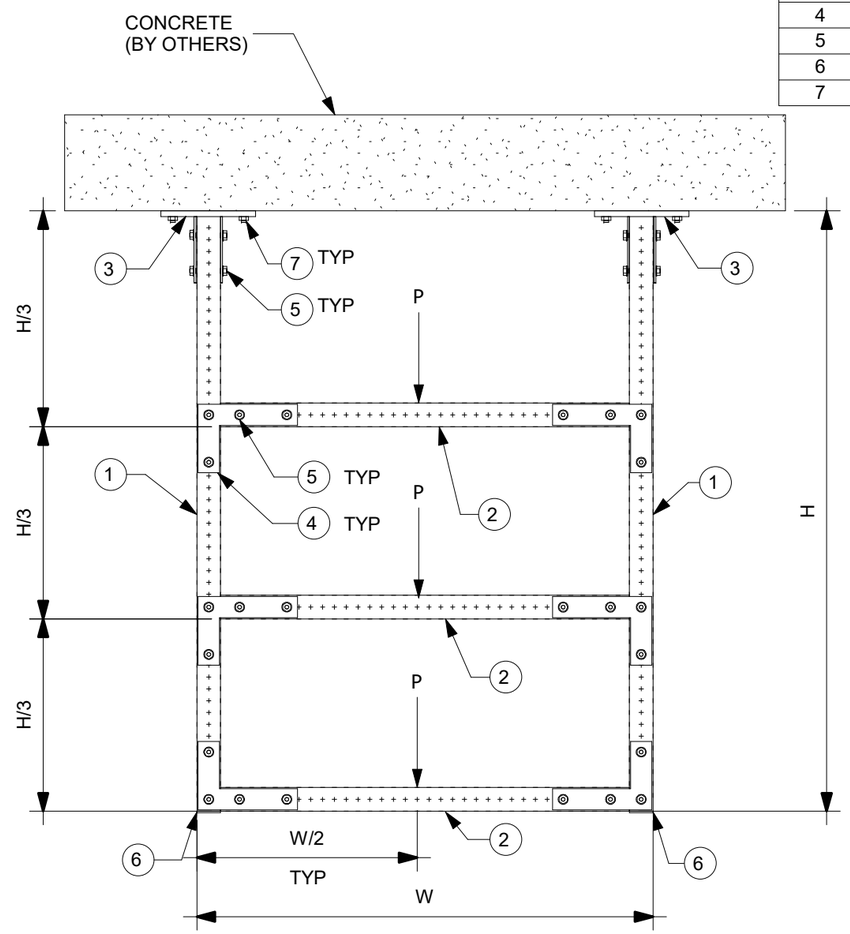

2 ELEVATION
N.T.S.

NOTE(S):

A. THE TYPICAL SUPPORT IS LOAD RATED AND DIMENSIONALLY LIMITED BASED ON DESIGN METHODOLOGY AND GENERIC NON-PROJECT SPECIFIC ASSUMPTIONS SET FORTH IN PROFIS MODULAR SUPPORTS ENGINEERING SOFTWARE. THE ENGINEER OF RECORD SHALL EVALUATE THIS TYPICAL SUPPORT TO DETERMINE ITS SUITABILITY FOR THE ACTUAL PROJECT SPECIFIC DESIGN CRITERIA AND REQUIREMENTS.

B. THE EVALUATION OF EXISTING STRUCTURE IS OUTSIDE OF THE TYPICAL DESIGN SCOPE AND SHALL BE PERFORMED BY THE ENGINEER OF RECORD.

C. TYPICAL SUPPORT DESIGN IS BASED ON INTERNATIONAL BUILDING CODE (IBC) 2018. SEE TABLE-A FOR ALLOWABLE STRENGTH DESIGN LOADS (STATIC U.N.O.); GOVERNING LATERAL LOADS NOTED IN THE ALLOWABLE LOAD TABLE IS MAXIMUM OF 30% OF DEAD LOAD.

D. ALL LOADS ASSUMED TO ACT ON THE SUPPORT, NO ECCENTRICITY CONSIDERED

E. MAXIMUM ALLOWABLE LOADS NOTED IN TABLE-A ARE BASED ON THE GOVERNING COMBINATION OF VERTICAL LOAD WITH TRANSVERSE LOAD OR VERTICAL LOAD WITH LONGITUDINAL LOAD. A SEPARATE ANALYSIS MUST BE PERFORMED WHEN TRANSVERSE AND LONGITUDINAL LOAD OCCURS SIMULTANEOUSLY.

F. REFER TO HILTI INSTRUCTION FOR USE SHEET FOR REQUIRED INSTALLATION INFORMATION.

G. USE ½" DIA. HILT KWIK BOLT-TZ WITH MIN 3-5/8" EFFECTIVE EMBEDMENT. INSTALL ANCHOR PER ESR-1917 AND HILTI'S INSTRUCTIONS FOR USE AND RECOMMENDATIONS. MIN. CONCRETE COMPRESSIVE STRENGTH F'C= 3000 PSI, MIN. CONCRETE EDGE DISTANCE = 6", AND MIN. CONCRETE THICKNESS 6".

H. CONCRETE ANCHORS NOTED IN THE BILL OF MATERIAL ARE DESIGNED ONLY FOR WIND LATERAL LOADING. ENGINEER OF RECORD TO VERIFY ADEQUACY OF ANCHOR WHEN TYPICAL IS BEING USED FOR SEISMIC LATERAL LOADING.

TABLE A			
	Max H, in	36	48
	Max W, in	36	48
ALLOWABLE LOADS, lbs	Vertical (P)	650	375
	Transverse	195	112
	Longitudinal	195	112

All loading and design criteria supplied by customer is assumed accurate. Only the stated Design Assumptions were considered, and must be verified by the responsible Engineer of Record (EOR). The basis of Hilti component and connection design is the published data in the current Hilti Technical Guide, including material and cross-section properties, allowable load values, factors of safety, methods of calculation, and limiting factors. The EOR must verify suitability for any specific application, and the capacity of the supportive structure to receive the shown configuration and associated reaction loads. Modification to components and/or design may alter performance and must be evaluated by the EOR.

REVISION HISTORY

NO:	DESCRIPTION:	DATE:
A	ISSUE FOR REVIEW	12/14/2020

PROJECT NAME:
TRAPEZE MT70 C 004

PROJECT DESCRIPTION:
TRAPEZE MT70 C 004

DRAWN:	CHECKED:	DESIGNED:	REVIEWED:
MDH	GAB	JDR	BVD

PAPER SIZE: ANSI B

PROJECT NUMBER: PROJECT - JOB TR7C4 - SHEET 1

BIM 360://Hilti - MT Typicals/TR7C4.rvt

MARK	ITEM NO.	DESCRIPTION	QTY.
1	2268365	MT-70 L OC	1
2	2268365	MT-70 L OC	1
3	2272101	MT-B-GS O4U OC	2
4	2272073	MT-C-GSP L OC	2
5	2272084	MT-TFB OC	20
6	2194341	X-BT-MR W10/15 SN 8	8
7	2273697	MT-EC-70	1

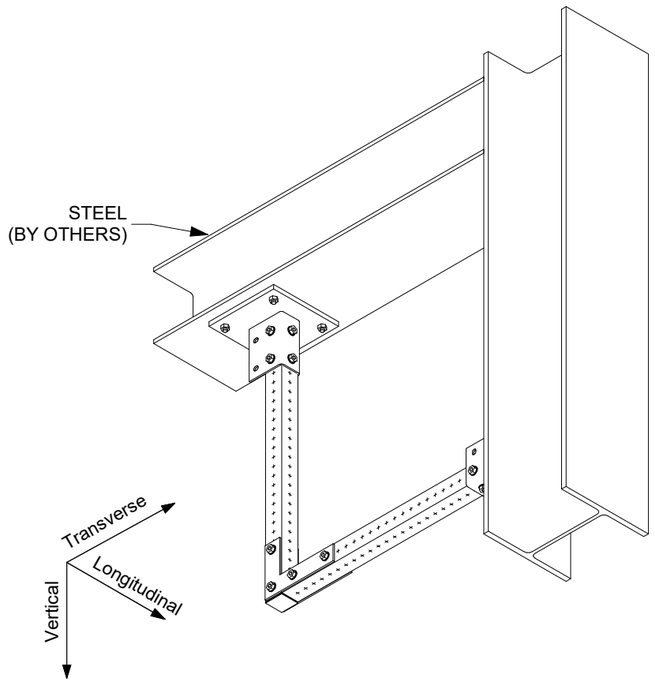

1 ISOMETRIC
N.T.S.

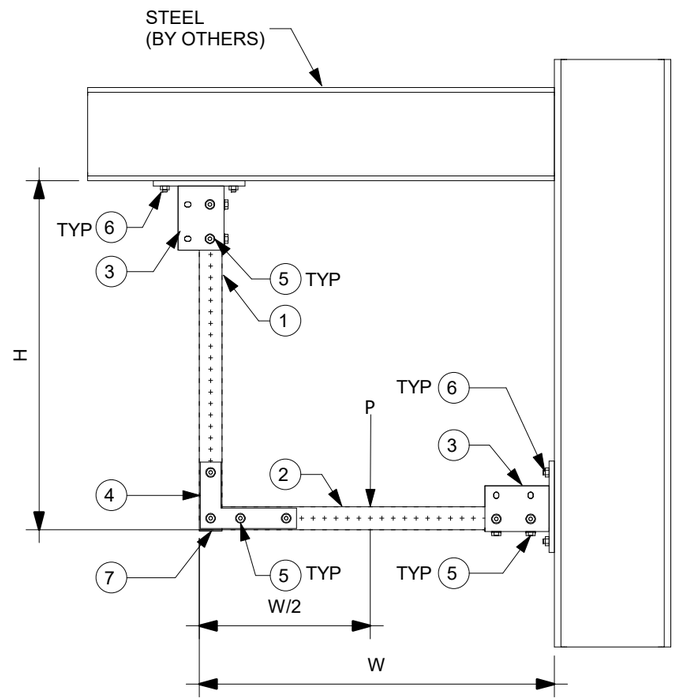

2 ELEVATION
N.T.S.

NOTE(S):

A. THE TYPICAL SUPPORT IS LOAD RATED AND DIMENSIONALLY LIMITED BASED ON DESIGN METHODOLOGY AND GENERIC NON-PROJECT SPECIFIC ASSUMPTIONS SET FORTH IN PROFIS MODULAR SUPPORTS ENGINEERING SOFTWARE. THE ENGINEER OF RECORD SHALL EVALUATE THIS TYPICAL SUPPORT TO DETERMINE ITS SUITABILITY FOR THE ACTUAL PROJECT SPECIFIC DESIGN CRITERIA AND REQUIREMENTS.

B. THE EVALUATION OF EXISTING STRUCTURE IS OUTSIDE OF THE TYPICAL DESIGN SCOPE AND SHALL BE PERFORMED BY THE ENGINEER OF RECORD.

C. TYPICAL SUPPORT DESIGN IS BASED ON INTERNATIONAL BUILDING CODE (IBC) 2018. SEE TABLE-A FOR ALLOWABLE STRENGTH DESIGN LOADS (STATIC U.N.O.); GOVERNING LATERAL LOADS NOTED IN THE ALLOWABLE LOAD TABLE IS MAXIMUM OF 30% OF DEAD LOAD.

D. ALL LOADS ASSUMED TO ACT ON THE SUPPORT, NO ECCENTRICITY CONSIDERED.

E. MAXIMUM ALLOWABLE LOADS NOTED IN TABLE-A ARE BASED ON THE GOVERNING COMBINATION OF VERTICAL LOAD WITH TRANSVERSE LOAD OR VERTICAL LOAD WITH LONGITUDINAL LOAD. A SEPARATE ANALYSIS MUST BE PERFORMED WHEN TRANSVERSE AND LONGITUDINAL LOAD OCCURS SIMULTANEOUSLY.

F. REFER TO HILTI INSTRUCTION FOR USE SHEET FOR REQUIRED INSTALLATION INFORMATION. THREAD FORMING BOLT MAY BE INSTALLED USING A TORQUE WRENCH OR SI-AT-A22 PER INSTRUCTION FOR USE.

G. X-BT REQUIREMENT: MIN. STEEL BASE MATERIAL THICKNESS SHALL BE 5/16". MIN EDGE DISTANCE SHALL BE 3/8". MIN YIELD STRENGTH OF STEEL SHALL BE FY=36KSI.

TABLE A				
	Max H, in	24	36	48
	Max W, in	24	36	48
ALLOWABLE LOADS, lbs	Vertical (P)	1300	975	760
	Transverse	390	292	228
	Longitudinal	390	292	228

All loading and design criteria supplied by customer is assumed accurate. Only the stated Design Assumptions were considered, and must be verified by the responsible Engineer of Record (EOR). The basis of Hilti component and connection design is the published data in the current Hilti Technical Guide, including material and cross-section properties, allowable load values, factors of safety, methods of calculation, and limiting factors. The EOR must verify suitability for any specific application, and the capacity of the supportive structure to receive the shown configuration and associated reaction loads. Modification to components and/or design may alter performance and must be evaluated by the EOR.

REVISION HISTORY

NO:	DESCRIPTION:	DATE:
A	ISSUE FOR REVIEW	12/14/2020

PROJECT NAME:
TRAPEZE MT70 S 001

PROJECT DESCRIPTION:
TRAPEZE MT70 S 001

DRAWN:	CHECKED:	DESIGNED:	REVIEWED:
GAB	IDP	JDR	BVD

PAPER SIZE: ANSI B

PROJECT NUMBER:

PROJECT	JOB	SHEET
-	TR7S1 -	1

BIM 360://Hilti - MT Typicals/TR7S1.rvt

MARK	ITEM NO.	DESCRIPTION	QTY.
1	2268365	MT-70 L OC	2
2	2268365	MT-70 L OC	1
3	2272101	MT-B-GS O4U OC	2
4	2272073	MT-C-GSP L OC	4
5	2272084	MT-TFB OC	28
6	2273697	MT-EC-70	2
7	2194341	X-BT-MR W10/15 SN 8	8

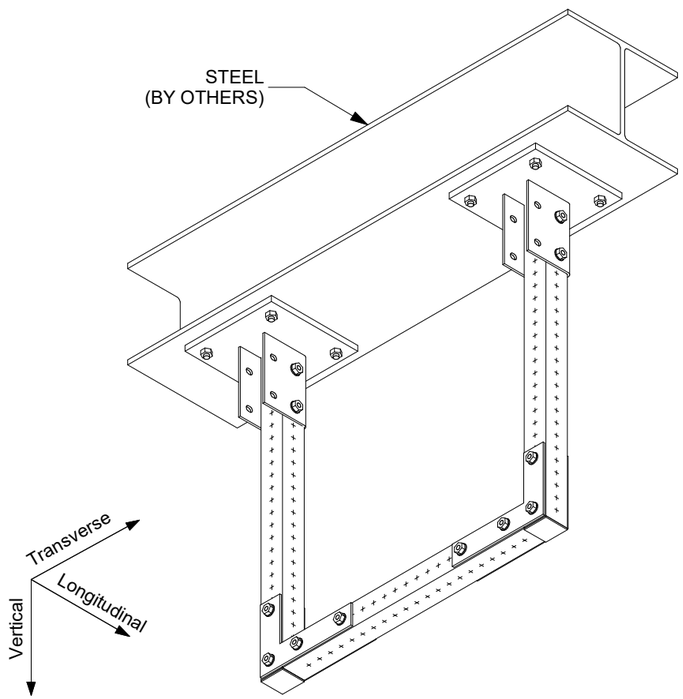

1 ISOMETRIC
N.T.S.

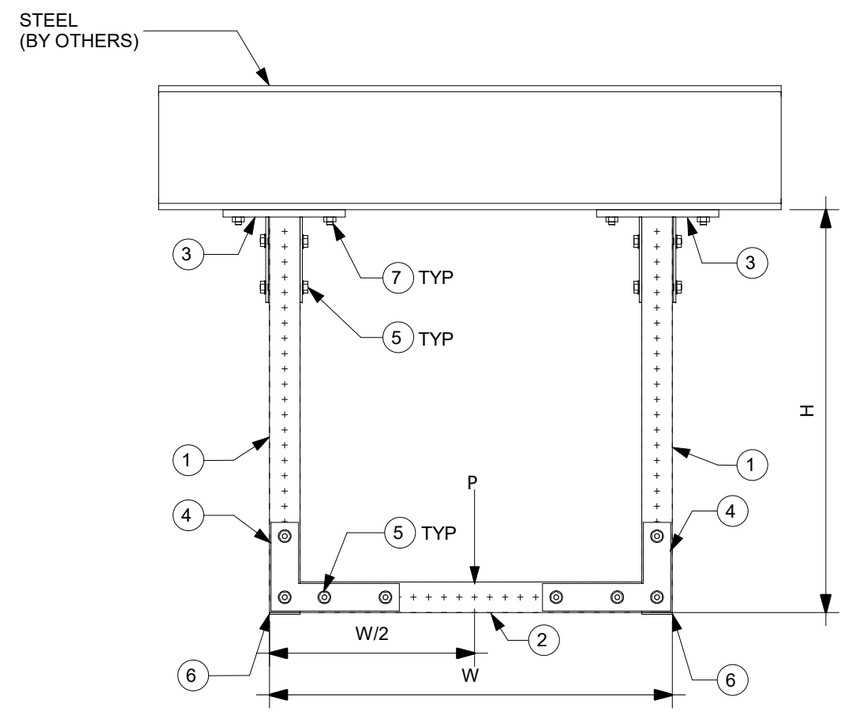

2 ELEVATION
N.T.S.

NOTE(S):

A. THE TYPICAL SUPPORT IS LOAD RATED AND DIMENSIONALLY LIMITED BASED ON DESIGN METHODOLOGY AND GENERIC NON-PROJECT SPECIFIC ASSUMPTIONS SET FORTH IN PROFIS MODULAR SUPPORTS ENGINEERING SOFTWARE. THE ENGINEER OF RECORD SHALL EVALUATE THIS TYPICAL SUPPORT TO DETERMINE ITS SUITABILITY FOR THE ACTUAL PROJECT SPECIFIC DESIGN CRITERIA AND REQUIREMENTS.

B. THE EVALUATION OF EXISTING STRUCTURE IS OUTSIDE OF THE TYPICAL DESIGN SCOPE AND SHALL BE PERFORMED BY THE ENGINEER OF RECORD.

C. TYPICAL SUPPORT DESIGN IS BASED ON INTERNATIONAL BUILDING CODE (IBC) 2018. SEE TABLE-A FOR ALLOWABLE STRENGTH DESIGN LOADS (STATIC U.N.O.); GOVERNING LATERAL LOADS NOTED IN THE ALLOWABLE LOAD TABLE IS MAXIMUM OF 30% OF DEAD LOAD.

D. ALL LOADS ASSUMED TO ACT ON THE SUPPORT, NO ECCENTRICITY CONSIDERED.

E. MAXIMUM ALLOWABLE LOADS NOTED IN TABLE-A ARE BASED ON THE GOVERNING COMBINATION OF VERTICAL LOAD WITH TRANSVERSE LOAD OR VERTICAL LOAD WITH LONGITUDINAL LOAD. A SEPARATE ANALYSIS MUST BE PERFORMED WHEN TRANSVERSE AND LONGITUDINAL LOAD OCCURS SIMULTANEOUSLY.

F. REFER TO HILTI INSTRUCTION FOR USE SHEET FOR REQUIRED INSTALLATION INFORMATION. THREAD FORMING BOLT MAY BE INSTALLED USING A TORQUE WRENCH OR SI-AT-A22 PER INSTRUCTION FOR USE.

G. X-BT REQUIREMENT: MIN. STEEL BASE MATERIAL THICKNESS SHALL BE 5/16". MIN EDGE DISTANCE SHALL BE 3/8". MIN YIELD STRENGTH OF STEEL SHALL BE FY=36KSI.

TABLE A

	Max H, in	24	36	48
	Max W, in	24	36	48
ALLOWABLE LOADS, lbs	Vertical (P)	1400	925	625
	Transverse	420	277	187
	Longitudinal	420	277	187

All loading and design criteria supplied by customer is assumed accurate. Only the stated Design Assumptions were considered, and must be verified by the responsible Engineer of Record (EOR). The basis of Hilti component and connection design is the published data in the current Hilti Technical Guide, including material and cross-section properties, allowable load values, factors of safety, methods of calculation, and limiting factors. The EOR must verify suitability for any specific application, and the capacity of the supportive structure to receive the shown configuration and associated reaction loads. Modification to components and/or design may alter performance and must be evaluated by the EOR.

REVISION HISTORY

NO:	DESCRIPTION:	DATE:
A	ISSUE FOR REVIEW	12/14/2020

PROJECT NAME:
TRAPEZE MT70 S 002

PROJECT DESCRIPTION:
TRAPEZE MT70 S 002

DRAWN:	CHECKED:	DESIGNED:	REVIEWED:
GAB	IDP	JDR	BVD

PAPER SIZE: ANSI B

PROJECT NUMBER: PROJECT - JOB TR7S2 - SHEET 1

BIM 360://Hilti - MT Typicals/TR7S2.rvt

MARK	ITEM NO.	DESCRIPTION	QTY.
1	2268365	MT-70 L OC	2
2	2268365	MT-70 L OC	2
3	2272101	MT-B-GS O4U OC	2
4	2272073	MT-C-GSP L OC	8
5	2272084	MT-TFB OC	44
6	2273697	MT-EC-70	2
7	2194341	X-BT-MR W10/15 SN 8	8

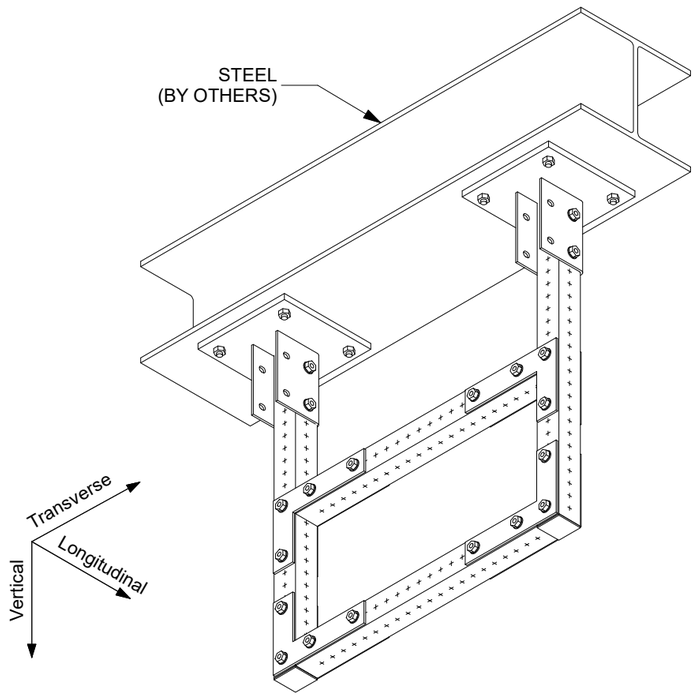

1 ISOMETRIC
N.T.S.

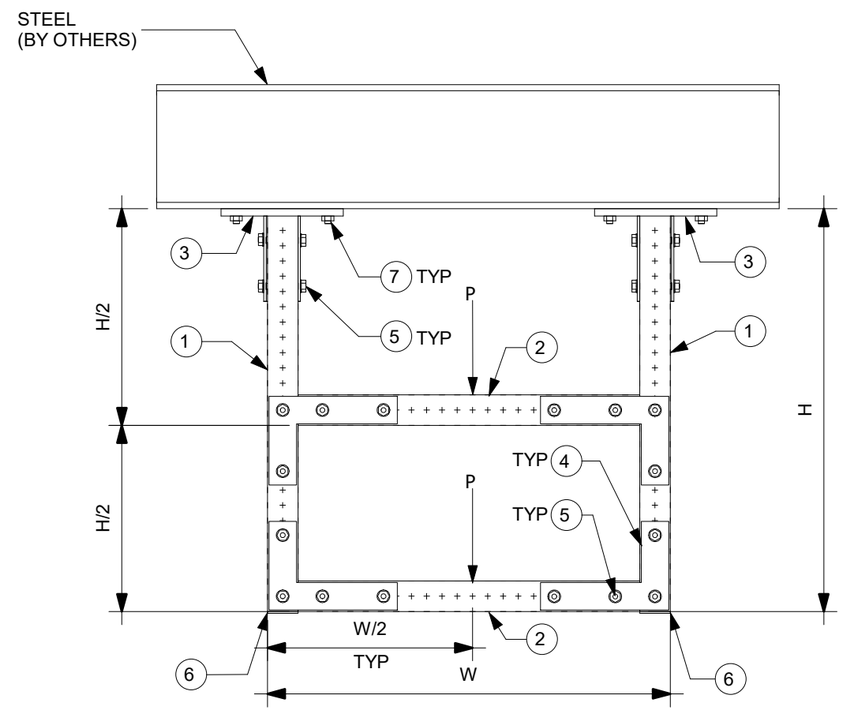

2 ELEVATION
N.T.S.

NOTE(S):

A. THE TYPICAL SUPPORT IS LOAD RATED AND DIMENSIONALLY LIMITED BASED ON DESIGN METHODOLOGY AND GENERIC NON-PROJECT SPECIFIC ASSUMPTIONS SET FORTH IN PROFIS MODULAR SUPPORTS ENGINEERING SOFTWARE. THE ENGINEER OF RECORD SHALL EVALUATE THIS TYPICAL SUPPORT TO DETERMINE ITS SUITABILITY FOR THE ACTUAL PROJECT SPECIFIC DESIGN CRITERIA AND REQUIREMENTS.

B. THE EVALUATION OF EXISTING STRUCTURE IS OUTSIDE OF THE TYPICAL DESIGN SCOPE AND SHALL BE PERFORMED BY THE ENGINEER OF RECORD.

C. TYPICAL SUPPORT DESIGN IS BASED ON INTERNATIONAL BUILDING CODE (IBC) 2018. SEE TABLE-A FOR ALLOWABLE STRENGTH DESIGN LOADS (STATIC U.N.O.); GOVERNING LATERAL LOADS NOTED IN THE ALLOWABLE LOAD TABLE IS MAXIMUM OF 30% OF DEAD LOAD.

D. ALL LOADS ASSUMED TO ACT ON THE SUPPORT, NO ECCENTRICITY CONSIDERED.

E. MAXIMUM ALLOWABLE LOADS NOTED IN TABLE-A ARE BASED ON THE GOVERNING COMBINATION OF VERTICAL LOAD WITH TRANSVERSE LOAD OR VERTICAL LOAD WITH LONGITUDINAL LOAD. A SEPARATE ANALYSIS MUST BE PERFORMED WHEN TRANSVERSE AND LONGITUDINAL LOAD OCCURS SIMULTANEOUSLY.

F. REFER TO HILTI INSTRUCTION FOR USE SHEET FOR REQUIRED INSTALLATION INFORMATION. THREAD FORMING BOLT MAY BE INSTALLED USING A TORQUE WRENCH OR SI-AT-A22 PER INSTRUCTION FOR USE.

G. X-BT REQUIREMENT: MIN. STEEL BASE MATERIAL THICKNESS SHALL BE 5/16". MIN EDGE DISTANCE SHALL BE 3/8". MIN YIELD STRENGTH OF STEEL SHALL BE FY=36KSI.

TABLE A

	Max H, in	24	36	48
	Max W, in	24	36	48
ALLOWABLE LOADS, lbs	Vertical (P)	900	720	475
	Transverse	270	216	142
	Longitudinal	270	216	142

All loading and design criteria supplied by customer is assumed accurate. Only the stated Design Assumptions were considered, and must be verified by the responsible Engineer of Record (EOR). The basis of Hilti component and connection design is the published data in the current Hilti Technical Guide, including material and cross-section properties, allowable load values, factors of safety, methods of calculation, and limiting factors. The EOR must verify suitability for any specific application, and the capacity of the supportive structure to receive the shown configuration and associated reaction loads. Modification to components and/or design may alter performance and must be evaluated by the EOR.

REVISION HISTORY

NO:	DESCRIPTION:	DATE:
A	ISSUE FOR REVIEW	12/14/2020

PROJECT NAME:

TRAPEZE MT70 S 003

PROJECT DESCRIPTION:

TRAPEZE MT70 S 003

DRAWN:	CHECKED:	DESIGNED:	REVIEWED:
MDH	GAB	JDR	BVD

PAPER SIZE: ANSI B

PROJECT NUMBER:

PROJECT	JOB	SHEET
	- TR7S3 -	1

BIM 360://Hilti - MT Typicals/TR7S3.rvt

MARK	ITEM NO.	DESCRIPTION	QTY.
1	2268365	MT-70 L OC	2
2	2268365	MT-70 L OC	3
3	2272101	MT-B-GS O4U OC	2
4	2272073	MT-C-GSP L OC	12
5	2272084	MT-TFB OC	60
6	2273697	MT-EC-70	2
7	2194341	X-BT-MR W10/15 SN 8	8

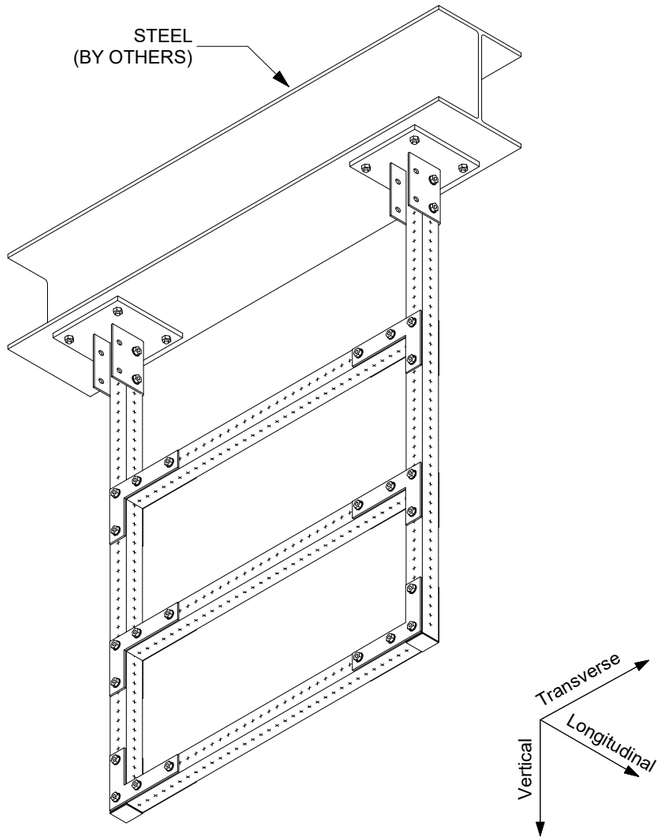

1 ISOMETRIC
N.T.S.

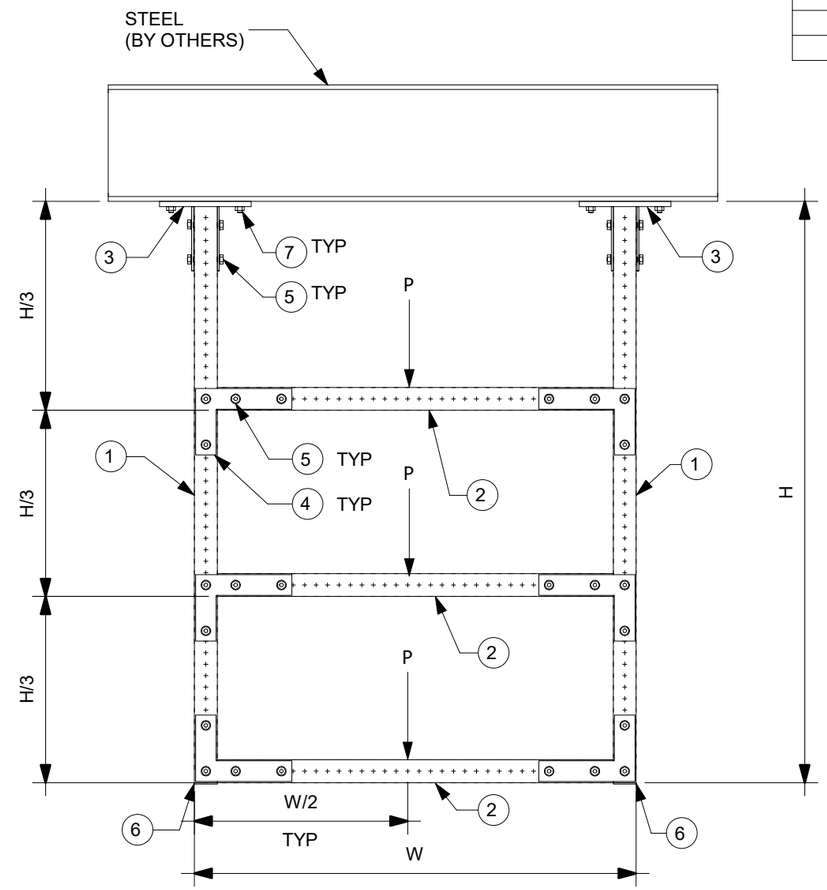

2 ELEVATION
N.T.S.

NOTE(S):

A. THE TYPICAL SUPPORT IS LOAD RATED AND DIMENSIONALLY LIMITED BASED ON DESIGN METHODOLOGY AND GENERIC NON-PROJECT SPECIFIC ASSUMPTIONS SET FORTH IN PROFIS MODULAR SUPPORTS ENGINEERING SOFTWARE. THE ENGINEER OF RECORD SHALL EVALUATE THIS TYPICAL SUPPORT TO DETERMINE ITS SUITABILITY FOR THE ACTUAL PROJECT SPECIFIC DESIGN CRITERIA AND REQUIREMENTS.

B. THE EVALUATION OF EXISTING STRUCTURE IS OUTSIDE OF THE TYPICAL DESIGN SCOPE AND SHALL BE PERFORMED BY THE ENGINEER OF RECORD.

C. TYPICAL SUPPORT DESIGN IS BASED ON INTERNATIONAL BUILDING CODE (IBC) 2018. SEE TABLE-A FOR ALLOWABLE STRENGTH DESIGN LOADS (STATIC U.N.O.); GOVERNING LATERAL LOADS NOTED IN THE ALLOWABLE LOAD TABLE IS MAXIMUM OF 30% OF DEAD LOAD.

D. ALL LOADS ASSUMED TO ACT ON THE SUPPORT, NO ECCENTRICITY CONSIDERED.

E. MAXIMUM ALLOWABLE LOADS NOTED IN TABLE-A ARE BASED ON THE GOVERNING COMBINATION OF VERTICAL LOAD WITH TRANSVERSE LOAD OR VERTICAL LOAD WITH LONGITUDINAL LOAD. A SEPARATE ANALYSIS MUST BE PERFORMED WHEN TRANSVERSE AND LONGITUDINAL LOAD OCCURS SIMULTANEOUSLY.

F. REFER TO HILTI INSTRUCTION FOR USE SHEET FOR REQUIRED INSTALLATION INFORMATION. THREAD FORMING BOLT MAY BE INSTALLED USING A TORQUE WRENCH OR SI-AT-A22 PER INSTRUCTION FOR USE.

G. X-BT REQUIREMENT: MIN. STEEL BASE MATERIAL THICKNESS SHALL BE 5/16". MIN EDGE DISTANCE SHALL BE 3/8". MIN YIELD STRENGTH OF STEEL SHALL BE FY=36KSI.

TABLE A				
	Max H, in	24	36	48
	Max W, in	24	36	48
ALLOWABLE LOADS, lbs	Vertical (P)	1250	650	375
	Transverse	375	195	112
	Longitudinal	375	195	112

All loading and design criteria supplied by customer is assumed accurate. Only the stated Design Assumptions were considered, and must be verified by the responsible Engineer of Record (EOR). The basis of Hilti component and connection design is the published data in the current Hilti Technical Guide, including material and cross-section properties, allowable load values, factors of safety, methods of calculation, and limiting factors. The EOR must verify suitability for any specific application, and the capacity of the supportive structure to receive the shown configuration and associated reaction loads. Modification to components and/or design may alter performance and must be evaluated by the EOR.

REVISION HISTORY

NO:	DESCRIPTION:	DATE:
A	ISSUE FOR REVIEW	12/14/2020

PROJECT NAME:
TRAPEZE MT70 S 004

PROJECT DESCRIPTION:
TRAPEZE MT70 S 004

DRAWN:	CHECKED:	DESIGNED:	REVIEWED:
GAB	IDP	JDR	BVD

PAPER SIZE: ANSI B

PROJECT NUMBER:

PROJECT	JOB	SHEET
-	TR7S4 -	1

BIM 360://Hilti - MT Typicals/TR7S4.rvt

MARK	ITEM NO.	DESCRIPTION	QTY.
1	2268367	MT-80 L OC	2
2	2268367	MT-80 L OC	1
3	2272101	MT-B-GS O4U OC	2
4	2272073	MT-C-GSP L OC	4
5	2272084	MT-TFB OC	36
6	387527	ANCHOR KB-TZ 1/2" x 4-1/2" SS304	8
7	2273698	MT-EC-80	2

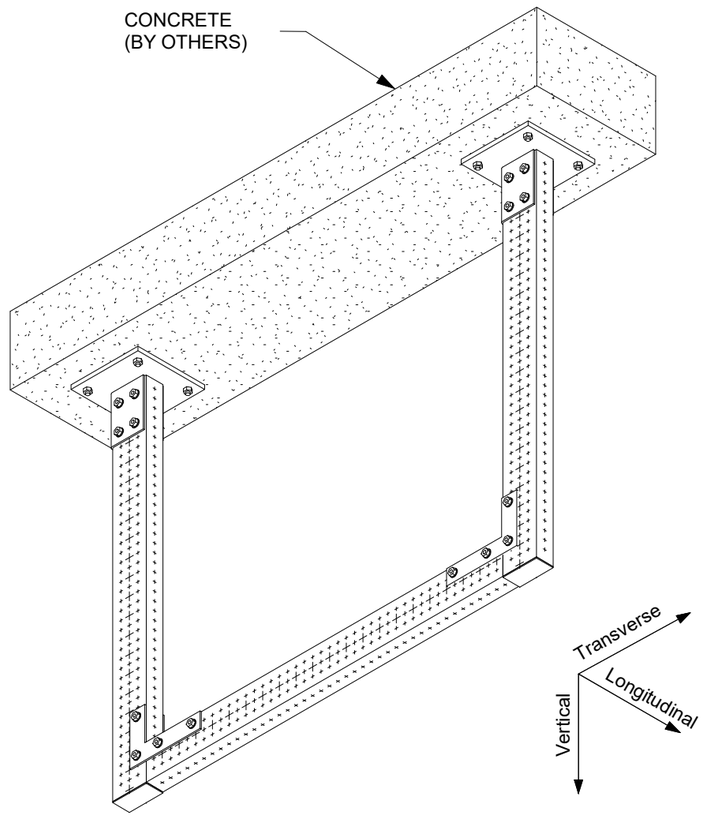

1 ISOMETRIC
N.T.S.

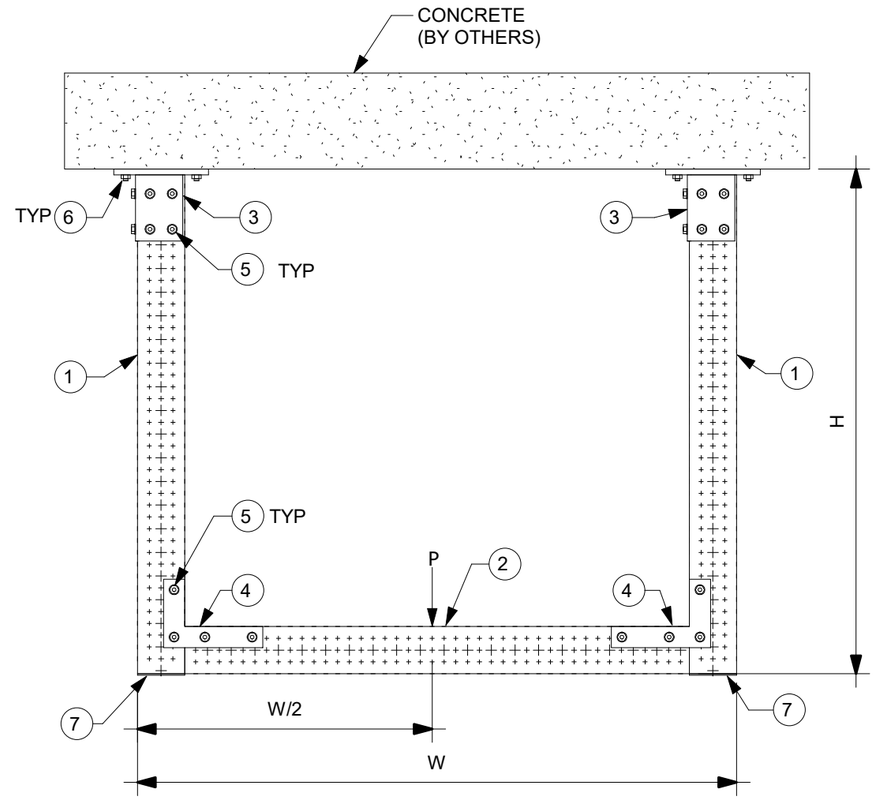

2 ELEVATION
N.T.S.

NOTE(S):

A. THE TYPICAL SUPPORT IS LOAD RATED AND DIMENSIONALLY LIMITED BASED ON DESIGN METHODOLOGY AND GENERIC NON-PROJECT SPECIFIC ASSUMPTIONS SET FORTH IN PROFIS MODULAR SUPPORTS ENGINEERING SOFTWARE. THE ENGINEER OF RECORD SHALL EVALUATE THIS TYPICAL SUPPORT TO DETERMINE ITS SUITABILITY FOR THE ACTUAL PROJECT SPECIFIC DESIGN CRITERIA AND REQUIREMENTS.

B. THE EVALUATION OF EXISTING STRUCTURE IS OUTSIDE OF THE TYPICAL DESIGN SCOPE AND SHALL BE PERFORMED BY THE ENGINEER OF RECORD.

C. TYPICAL SUPPORT DESIGN IS BASED ON INTERNATIONAL BUILDING CODE (IBC) 2018. SEE TABLE-A FOR ALLOWABLE STRENGTH DESIGN LOADS (STATIC U.N.O.); GOVERNING LATERAL LOADS NOTED IN THE ALLOWABLE LOAD TABLE IS MAXIMUM OF 30% OF DEAD LOAD.

D. ALL LOADS ASSUMED TO ACT ON THE SUPPORT, NO ECCENTRICITY CONSIDERED

E. MAXIMUM ALLOWABLE LOADS NOTED IN TABLE-A ARE BASED ON THE GOVERNING COMBINATION OF VERTICAL LOAD WITH TRANSVERSE LOAD OR VERTICAL LOAD WITH LONGITUDINAL LOAD. A SEPARATE ANALYSIS MUST BE PERFORMED WHEN TRANSVERSE AND LONGITUDINAL LOAD OCCURS SIMULTANEOUSLY.

F. REFER TO HILTI INSTRUCTION FOR USE SHEET FOR REQUIRED INSTALLATION INFORMATION.

G. USE ½" DIA. HILT KWIK BOLT-TZ WITH MIN 3-5/8" EFFECTIVE EMBEDMENT. INSTALL ANCHOR PER ESR-1917 AND HILTI'S INSTRUCTIONS FOR USE AND RECOMMENDATIONS. MIN. CONCRETE COMPRESSIVE STRENGTH F'C= 3000 PSI, MIN. CONCRETE EDGE DISTANCE = 6", AND MIN. CONCRETE THICKNESS 6".

H. CONCRETE ANCHORS NOTED IN THE BILL OF MATERIAL ARE DESIGNED ONLY FOR WIND LATERAL LOADING. ENGINEER OF RECORD TO VERIFY ADEQUACY OF ANCHOR WHEN TYPICAL IS BEING USED FOR SEISMIC LATERAL LOADING.

TABLE A				
	Max H, in	24	36	48
	Max W, in	24	36	48
ALLOWABLE LOADS, lbs	Vertical (P)	2300	1600	950
	Transverse	690	480	285
	Longitudinal	690	480	285

All loading and design criteria supplied by customer is assumed accurate. Only the stated Design Assumptions were considered, and must be verified by the responsible Engineer of Record (EOR). The basis of Hilti component and connection design is the published data in the current Hilti Technical Guide, including material and cross-section properties, allowable load values, factors of safety, methods of calculation, and limiting factors. The EOR must verify suitability for any specific application, and the capacity of the supportive structure to receive the shown configuration and associated reaction loads. Modification to components and/or design may alter performance and must be evaluated by the EOR.

REVISION HISTORY

NO:	DESCRIPTION:	DATE:
A	ISSUE FOR REVIEW	12/14/2020

PROJECT NAME:
TRAPEZE MT80 C 001

PROJECT DESCRIPTION:
TRAPEZE MT80 C 001

DRAWN:	CHECKED:	DESIGNED:	REVIEWED:
GAB	IDP	JDR	BVD

PAPER SIZE: ANSI B

PROJECT NUMBER:

PROJECT	JOB	SHEET
-	TR8C1 -	1

BIM 360://Hilti - MT Typicals/TR8C1.rvt

MARK	ITEM NO.	DESCRIPTION	QTY.
1	2268367	MT-80 L OC	2
2	2268367	MT-80 L OC	1
3	2272101	MT-B-GS O4U OC	2
4	2272073	MT-C-GSP L OC	8
5	2272084	MT-TFB OC	52
6	387527	ANCHOR KB-TZ 1/2" x 4-1/2" SS304	8
7	2273698	MT-EC-80	2
8	2268366	MT-80 S OC	1

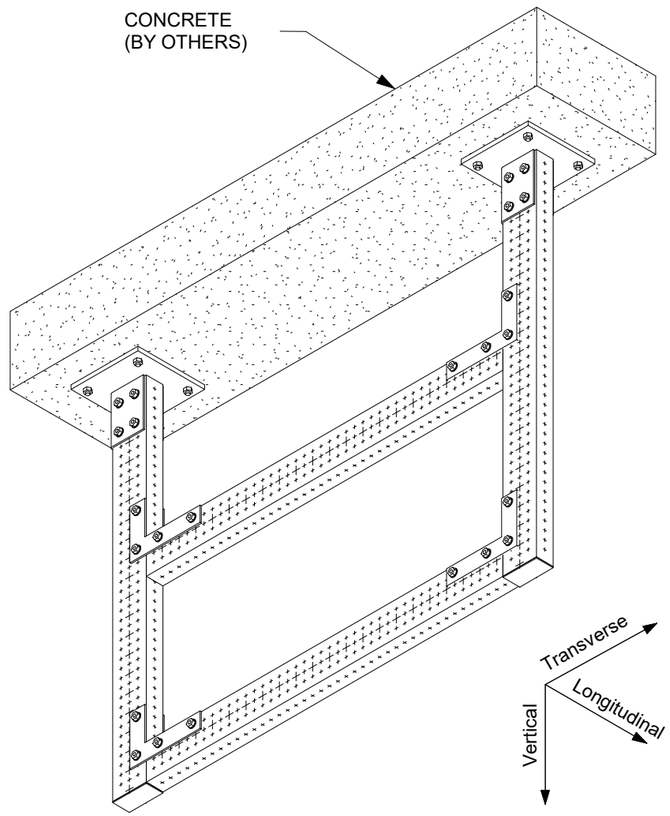

1 ISOMETRIC
N.T.S.

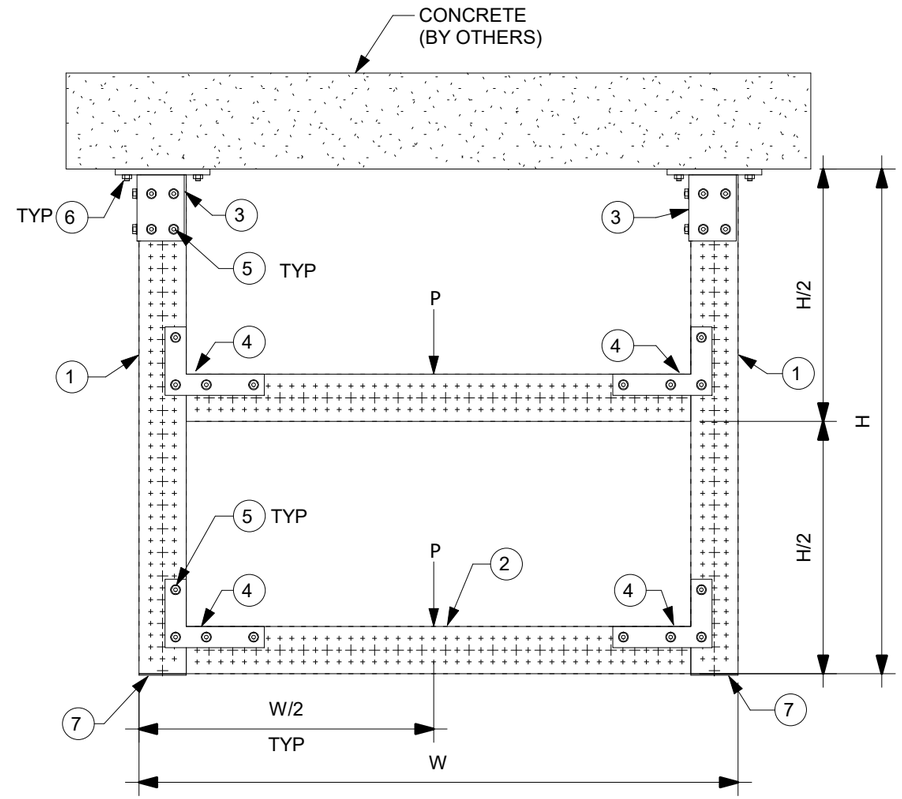

2 ELEVATION
N.T.S.

NOTE(S):

A. THE TYPICAL SUPPORT IS LOAD RATED AND DIMENSIONALLY LIMITED BASED ON DESIGN METHODOLOGY AND GENERIC NON-PROJECT SPECIFIC ASSUMPTIONS SET FORTH IN PROFIS MODULAR SUPPORTS ENGINEERING SOFTWARE. THE ENGINEER OF RECORD SHALL EVALUATE THIS TYPICAL SUPPORT TO DETERMINE ITS SUITABILITY FOR THE ACTUAL PROJECT SPECIFIC DESIGN CRITERIA AND REQUIREMENTS.

B. THE EVALUATION OF EXISTING STRUCTURE IS OUTSIDE OF THE TYPICAL DESIGN SCOPE AND SHALL BE PERFORMED BY THE ENGINEER OF RECORD.

C. TYPICAL SUPPORT DESIGN IS BASED ON INTERNATIONAL BUILDING CODE (IBC) 2018. SEE TABLE-A FOR ALLOWABLE STRENGTH DESIGN LOADS (STATIC U.N.O.); GOVERNING LATERAL LOADS NOTED IN THE ALLOWABLE LOAD TABLE IS MAXIMUM OF 30% OF DEAD LOAD.

D. ALL LOADS ASSUMED TO ACT ON THE SUPPORT, NO ECCENTRICITY CONSIDERED

E. MAXIMUM ALLOWABLE LOADS NOTED IN TABLE-A ARE BASED ON THE GOVERNING COMBINATION OF VERTICAL LOAD WITH TRANSVERSE LOAD OR VERTICAL LOAD WITH LONGITUDINAL LOAD. A SEPARATE ANALYSIS MUST BE PERFORMED WHEN TRANSVERSE AND LONGITUDINAL LOAD OCCURS SIMULTANEOUSLY.

F. REFER TO HILTI INSTRUCTION FOR USE SHEET FOR REQUIRED INSTALLATION INFORMATION.

G. USE ½" DIA. HILT KWIK BOLT-TZ WITH MIN 3-5/8" EFFECTIVE EMBEDMENT. INSTALL ANCHOR PER ESR-1917 AND HILTI'S INSTRUCTIONS FOR USE AND RECOMMENDATIONS. MIN. CONCRETE COMPRESSIVE STRENGTH F'C= 3000 PSI, MIN. CONCRETE EDGE DISTANCE = 6", AND MIN. CONCRETE THICKNESS 6".

H. CONCRETE ANCHORS NOTED IN THE BILL OF MATERIAL ARE DESIGNED ONLY FOR WIND LATERAL LOADING. ENGINEER OF RECORD TO VERIFY ADEQUACY OF ANCHOR WHEN TYPICAL IS BEING USED FOR SEISMIC LATERAL LOADING.

TABLE A				
	Max H, in	24	36	48
	Max W, in	24	36	48
ALLOWABLE LOADS, lbs	Vertical (P)	2000	1300	750
	Transverse	600	390	225
	Longitudinal	600	390	225

All loading and design criteria supplied by customer is assumed accurate. Only the stated Design Assumptions were considered, and must be verified by the responsible Engineer of Record (EOR). The basis of Hilti component and connection design is the published data in the current Hilti Technical Guide, including material and cross-section properties, allowable load values, factors of safety, methods of calculation, and limiting factors. The EOR must verify suitability for any specific application, and the capacity of the supportive structure to receive the shown configuration and associated reaction loads. Modification to components and/or design may alter performance and must be evaluated by the EOR.

REVISION HISTORY

NO:	DESCRIPTION:	DATE:
A	ISSUE FOR REVIEW	12/14/2020

PROJECT NAME:
TRAPEZE MT80 C 002

PROJECT DESCRIPTION:
TRAPEZE MT80 C 002

DRAWN:	CHECKED:	DESIGNED:	REVIEWED:
GAB	IDP	JDR	BVD

PAPER SIZE: ANSI B

PROJECT NUMBER: - TR8C2 - 1

BIM 360://Hilti - MT Typicals/TR8C2.rvt

MARK	ITEM NO.	DESCRIPTION	QTY.
1	2268367	MT-80 L OC	2
2	2268367	MT-80 L OC	3
3	2272101	MT-B-GS O4U OC	2
4	2272073	MT-C-GSP L OC	12
5	2272084	MT-TFB OC	68
6	387527	ANCHOR KB-TZ 1/2" x 4-1/2" SS304	8
7	2273698	MT-EC-80	2

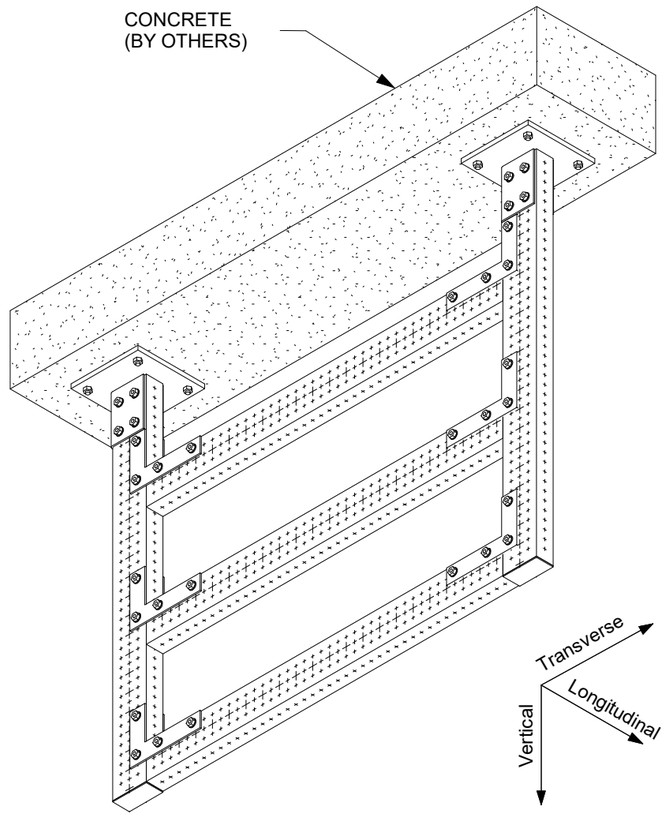

1 ISOMETRIC
N.T.S.

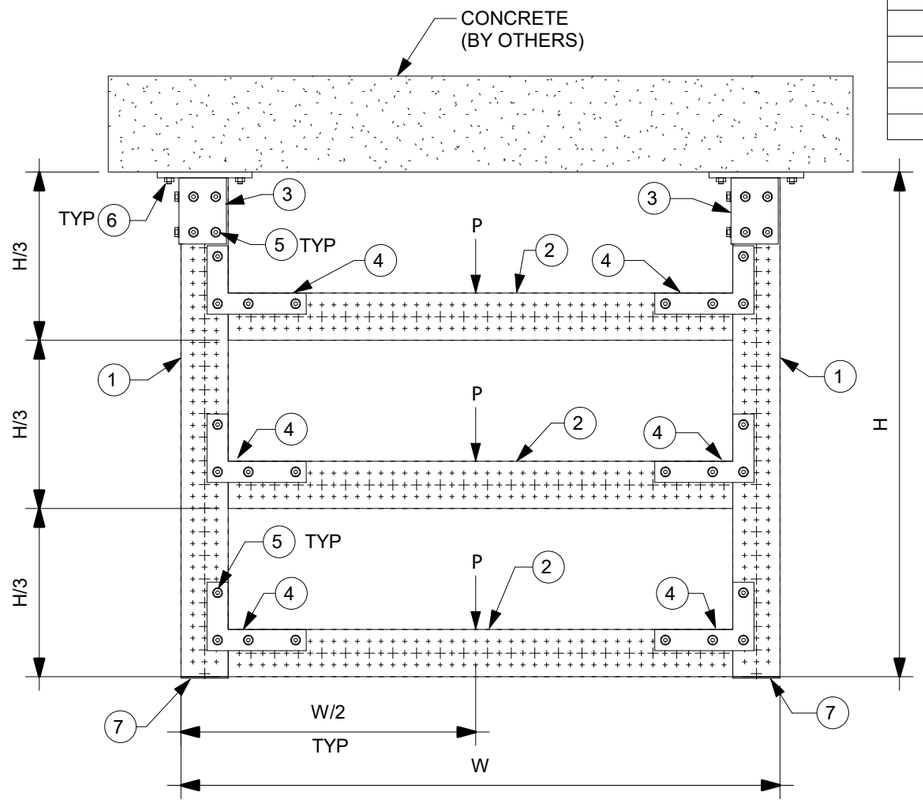

2 ELEVATION
N.T.S.

NOTE(S):

A. THE TYPICAL SUPPORT IS LOAD RATED AND DIMENSIONALLY LIMITED BASED ON DESIGN METHODOLOGY AND GENERIC NON-PROJECT SPECIFIC ASSUMPTIONS SET FORTH IN PROFIS MODULAR SUPPORTS ENGINEERING SOFTWARE. THE ENGINEER OF RECORD SHALL EVALUATE THIS TYPICAL SUPPORT TO DETERMINE ITS SUITABILITY FOR THE ACTUAL PROJECT SPECIFIC DESIGN CRITERIA AND REQUIREMENTS.

B. THE EVALUATION OF EXISTING STRUCTURE IS OUTSIDE OF THE TYPICAL DESIGN SCOPE AND SHALL BE PERFORMED BY THE ENGINEER OF RECORD.

C. TYPICAL SUPPORT DESIGN IS BASED ON INTERNATIONAL BUILDING CODE (IBC) 2018. SEE TABLE-A FOR ALLOWABLE STRENGTH DESIGN LOADS (STATIC U.N.O.); GOVERNING LATERAL LOADS NOTED IN THE ALLOWABLE LOAD TABLE IS MAXIMUM OF 30% OF DEAD LOAD.

D. ALL LOADS ASSUMED TO ACT ON THE SUPPORT, NO ECCENTRICITY CONSIDERED

E. MAXIMUM ALLOWABLE LOADS NOTED IN TABLE-A ARE BASED ON THE GOVERNING COMBINATION OF VERTICAL LOAD WITH TRANSVERSE LOAD OR VERTICAL LOAD WITH LONGITUDINAL LOAD. A SEPARATE ANALYSIS MUST BE PERFORMED WHEN TRANSVERSE AND LONGITUDINAL LOAD OCCURS SIMULTANEOUSLY.

F. REFER TO HILTI INSTRUCTION FOR USE SHEET FOR REQUIRED INSTALLATION INFORMATION.

G. USE ½" DIA. HILT KWIK BOLT-TZ WITH MIN 3-5/8" EFFECTIVE EMBEDMENT. INSTALL ANCHOR PER ESR-1917 AND HILTI'S INSTRUCTIONS FOR USE AND RECOMMENDATIONS. MIN. CONCRETE COMPRESSIVE STRENGTH F'C= 3000 PSI, MIN. CONCRETE EDGE DISTANCE = 6", AND MIN. CONCRETE THICKNESS 6".

H. CONCRETE ANCHORS NOTED IN THE BILL OF MATERIAL ARE DESIGNED ONLY FOR WIND LATERAL LOADING. ENGINEER OF RECORD TO VERIFY ADEQUACY OF ANCHOR WHEN TYPICAL IS BEING USED FOR SEISMIC LATERAL LOADING.

TABLE A			
	Max H, in	36	48
	Max W, in	36	48
ALLOWABLE LOADS, lbs	Vertical (P)	1000	575
	Transverse	300	173
	Longitudinal	300	173

All loading and design criteria supplied by customer is assumed accurate. Only the stated Design Assumptions were considered, and must be verified by the responsible Engineer of Record (EOR). The basis of Hilti component and connection design is the published data in the current Hilti Technical Guide, including material and cross-section properties, allowable load values, factors of safety, methods of calculation, and limiting factors. The EOR must verify suitability for any specific application, and the capacity of the supportive structure to receive the shown configuration and associated reaction loads. Modification to components and/or design may alter performance and must be evaluated by the EOR.

REVISION HISTORY

NO:	DESCRIPTION:	DATE:
A	ISSUE FOR REVIEW	12/14/2020

PROJECT NAME:
TRAPEZE MT80 C 003

PROJECT DESCRIPTION:
TRAPEZE MT80 C 003

DRAWN:	CHECKED:	DESIGNED:	REVIEWED:
GAB	IDP	JDR	BVD

PAPER SIZE: ANSI B

PROJECT NUMBER: PROJECT - JOB TR8C3 - SHEET 1

BIM 360://Hilti - MT Typicals/TR8C3.rvt

MARK	ITEM NO.	DESCRIPTION	QTY.
1	2268367	MT-80 L OC	2
2	2268367	MT-80 L OC	1
3	2272101	MT-B-GS O4U OC	2
4	2272073	MT-C-GSP L OC	4
5	2272084	MT-TFB OC	36
6	2194341	X-BT-MR W10/15 SN 8	8
7	2273698	MT-EC-80	2

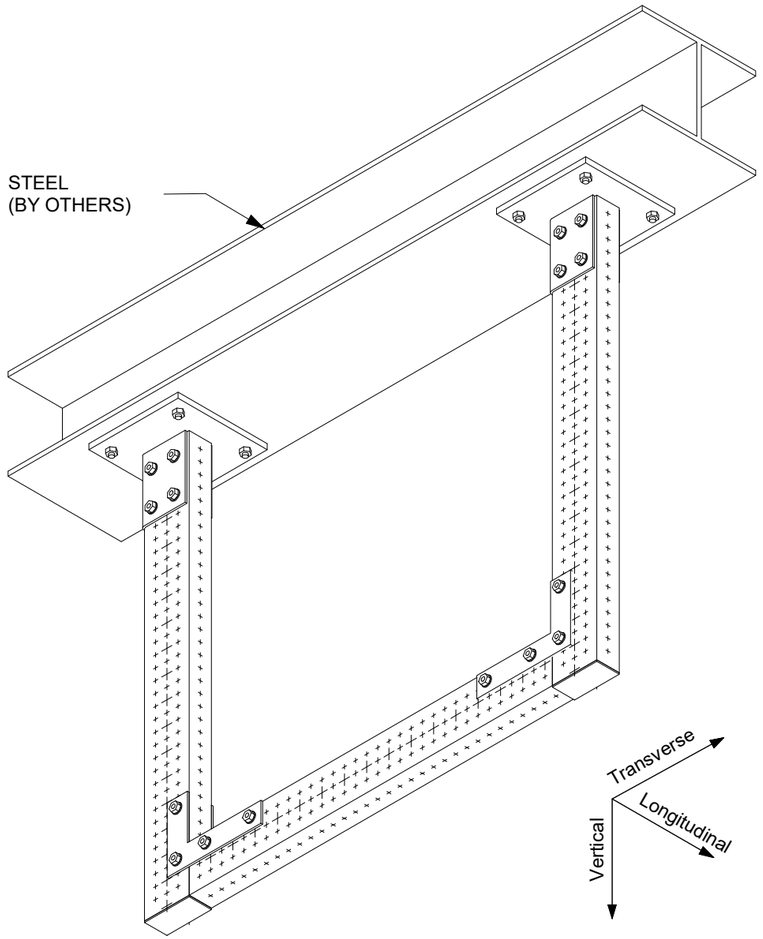

1 ISOMETRIC
N.T.S.

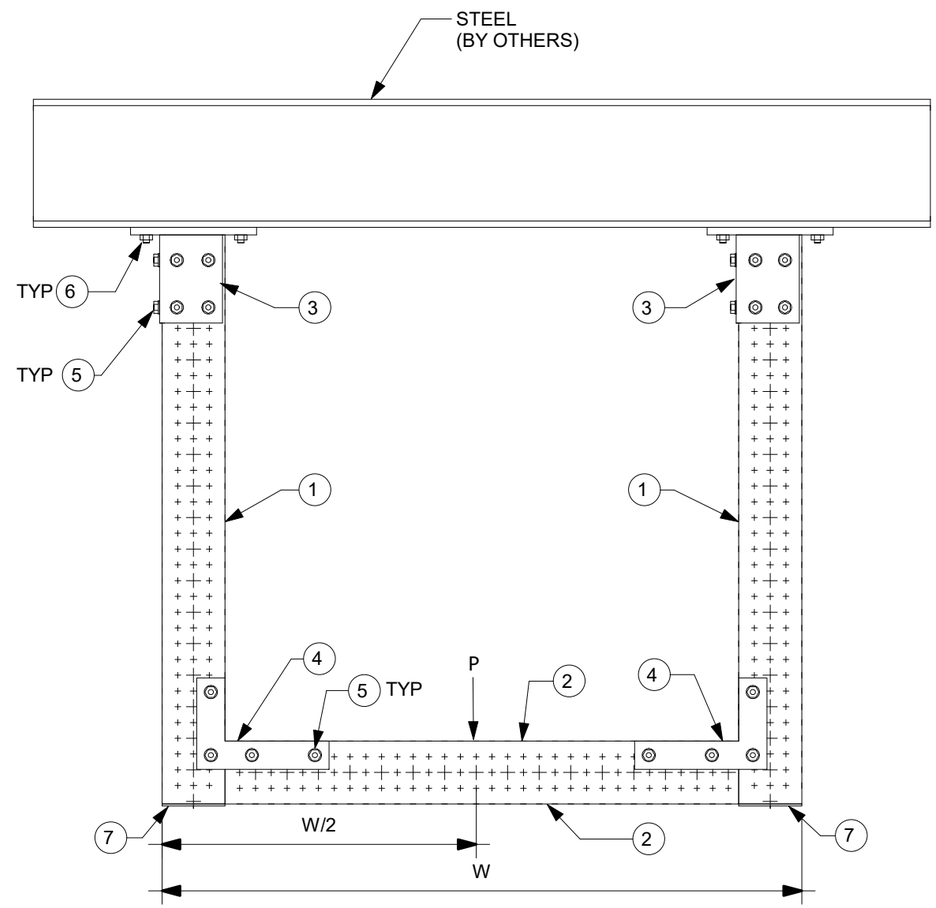

2 ELEVATION
N.T.S.

NOTE(S):

A. THE TYPICAL SUPPORT IS LOAD RATED AND DIMENSIONALLY LIMITED BASED ON DESIGN METHODOLOGY AND GENERIC NON-PROJECT SPECIFIC ASSUMPTIONS SET FORTH IN PROFIS MODULAR SUPPORTS ENGINEERING SOFTWARE. THE ENGINEER OF RECORD SHALL EVALUATE THIS TYPICAL SUPPORT TO DETERMINE ITS SUITABILITY FOR THE ACTUAL PROJECT SPECIFIC DESIGN CRITERIA AND REQUIREMENTS.

B. THE EVALUATION OF EXISTING STRUCTURE IS OUTSIDE OF THE TYPICAL DESIGN SCOPE AND SHALL BE PERFORMED BY THE ENGINEER OF RECORD.

C. TYPICAL SUPPORT DESIGN IS BASED ON INTERNATIONAL BUILDING CODE (IBC) 2018. SEE TABLE-A FOR ALLOWABLE STRENGTH DESIGN LOADS (STATIC U.N.O.); GOVERNING LATERAL LOADS NOTED IN THE ALLOWABLE LOAD TABLE IS MAXIMUM OF 30% OF DEAD LOAD.

D. ALL LOADS ASSUMED TO ACT ON THE SUPPORT, NO ECCENTRICITY CONSIDERED.

E. MAXIMUM ALLOWABLE LOADS NOTED IN TABLE-A ARE BASED ON THE GOVERNING COMBINATION OF VERTICAL LOAD WITH TRANSVERSE LOAD OR VERTICAL LOAD WITH LONGITUDINAL LOAD. A SEPARATE ANALYSIS MUST BE PERFORMED WHEN TRANSVERSE AND LONGITUDINAL LOAD OCCURS SIMULTANEOUSLY.

F. REFER TO HILTI INSTRUCTION FOR USE SHEET FOR REQUIRED INSTALLATION INFORMATION. THREAD FORMING BOLT MAY BE INSTALLED USING A TORQUE WRENCH OR SI-AT-A22 PER INSTRUCTION FOR USE.

G. X-BT REQUIREMENT: MIN. STEEL BASE MATERIAL THICKNESS SHALL BE 5/16". MIN EDGE DISTANCE SHALL BE 3/8". MIN YIELD STRENGTH OF STEEL SHALL BE FY=36KSI.

TABLE A

	Max H, in	24	36	48
	Max W, in	24	36	48
ALLOWABLE LOADS, lbs	Vertical (P)	1540	1200	950
	Transverse	462	360	285
	Longitudinal	462	360	285

All loading and design criteria supplied by customer is assumed accurate. Only the stated Design Assumptions were considered, and must be verified by the responsible Engineer of Record (EOR). The basis of Hilti component and connection design is the published data in the current Hilti Technical Guide, including material and cross-section properties, allowable load values, factors of safety, methods of calculation, and limiting factors. The EOR must verify suitability for any specific application, and the capacity of the supportive structure to receive the shown configuration and associated reaction loads. Modification to components and/or design may alter performance and must be evaluated by the EOR.

REVISION HISTORY

NO:	DESCRIPTION:	DATE:
A	ISSUE FOR REVIEW	12/14/2020

PROJECT NAME:
TRAPEZE MT80 S 001

PROJECT DESCRIPTION:
TRAPEZE MT80 S 001

DRAWN:	CHECKED:	DESIGNED:	REVIEWED:
MDH	IDP	JDR	BVD

PAPER SIZE: ANSI B

PROJECT NUMBER: PROJECT - JOB TR8S1 - SHEET 1

BIM 360://Hilti - MT Typicals/TR8S1.rvt