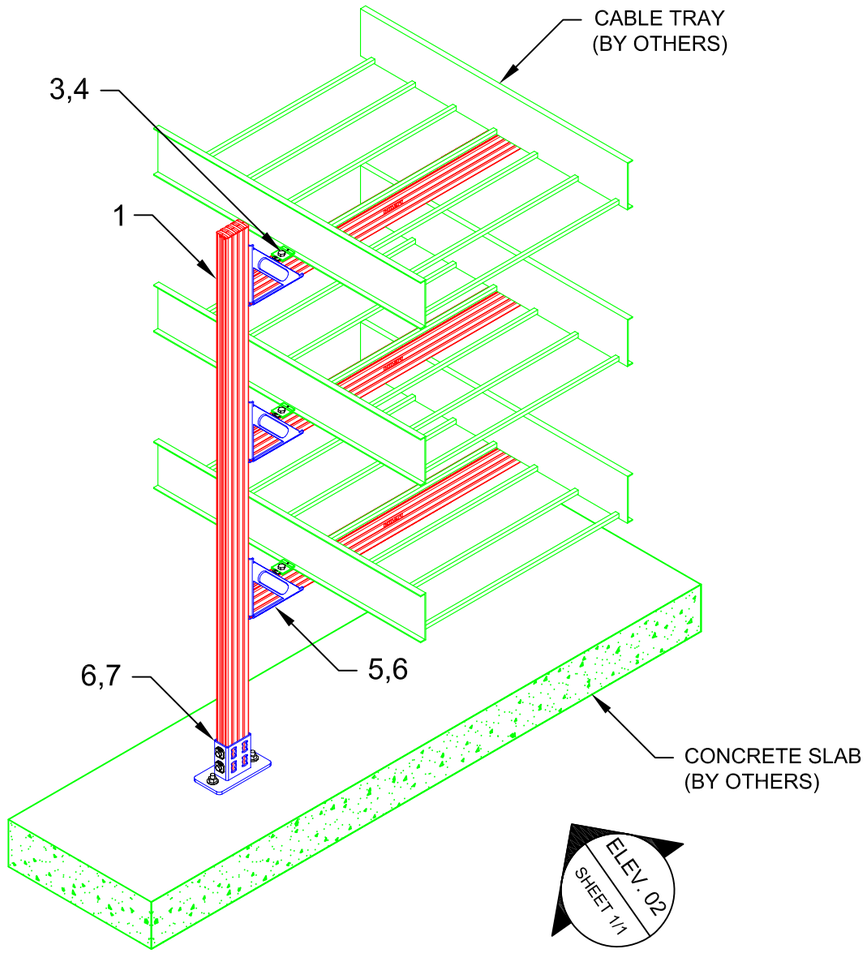

01 ISOMETRIC
N.T.S.

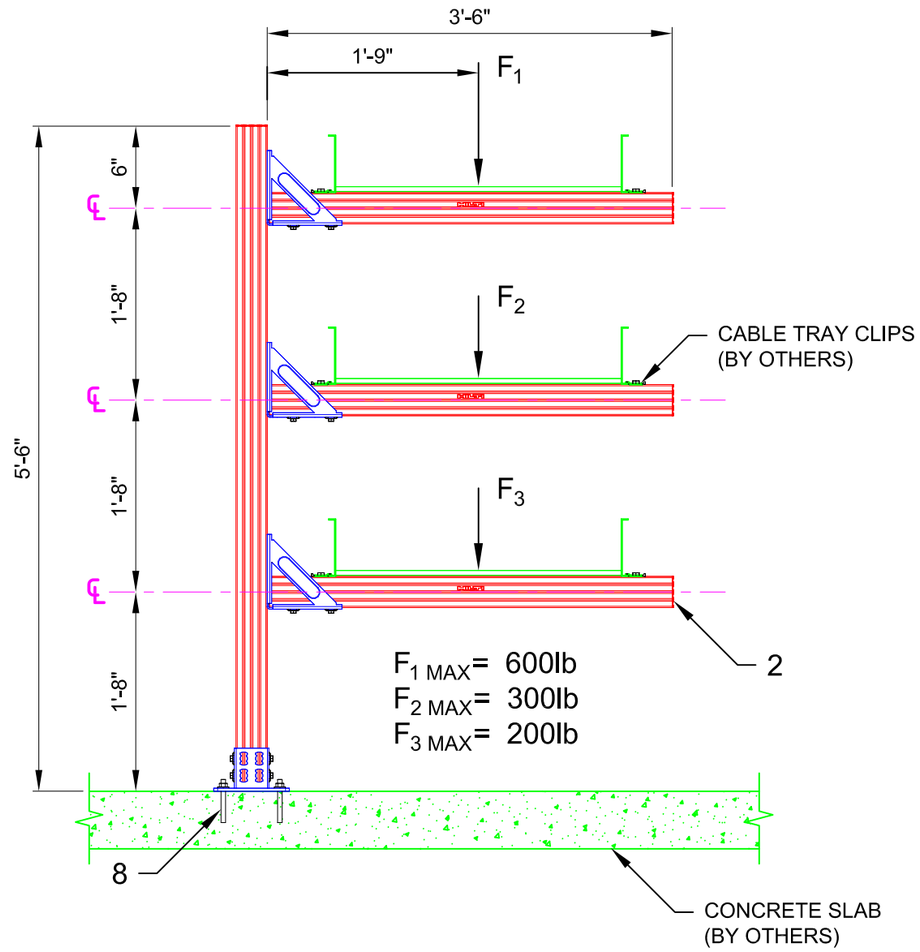

02 ELEVATION
N.T.S.

No.	Unit Qty	Unit	Description	Box Qty	# Boxes Needed	Item No.
1	AS REQ'D	EA	STRUT HS-158-12/PG 10' B2B	1	AS REQ'D	2007082
2	16	EA	CHANNEL END CAP MEK RED	50	1	244886
3	6	EA	WING NUT MQM-F3/8"-F	25	1	304136
4	6	EA	3/8" x 1/2" LONG HDG HEX HEAD BOLT	VARIES	VARIES	SPECIAL
5	3	EA	ANGLE BRACKET MQW-S/2	10	1	369665
6	16	EA	CHANNEL CONNECTOR MQN	50	1	369623
7	1	EA	BASE MQP-82	8	1	369652
8	2	EA	USE KB3 OR KB-TZ AS APPROPRIATE	VARIES	VARIES	VARIES

NOTE(S):

1. PRELIMINARY NOT FOR CONSTRUCTION
2. DESIGN ASSUMPTIONS:
   NO LOADS CONSIDERED - CONCEPT ONLY
   a. LATERAL LOADS NOT CONSIDERED
   b. BUILDING CODE: NOT SPECIFIED
   c. CORROSION RESISTANCE REQD.: NOT SPECIFIED
3. REFER TO COMPONENT MANUFACTURER'S IFUs FOR REQUIRED INSTALLATION INFO.
4. E.O.R. MUST BE NOTIFIED OF ANY DEVIATIONS FROM EXISTING/ NEW SUBSTRATE CONDITIONS SHOWN HEREIN TO VALIDATE ACCEPTANCE OF THIS HILTI DESIGN PRIOR TO INSTALLATION.

All loading and design criteria supplied by customer is assumed accurate. Only the stated Design Assumptions were considered, and must be verified by the responsible Engineer of Record (EOR). The basis of Hilti component and connection design is the published data in the current Hilti Technical Guide, including material and cross-section properties, allowable load values, factors of safety, methods of calculation, and limiting factors. The EOR must verify suitability for any specific application, and the capacity of the supportive structure to receive the shown configuration and associated reaction loads. Modification to components and/or design may alter performance and must be evaluated by the EOR.

TYPICAL DETAIL TYPE:

CABLE TRAY SUPPORT

TYPICAL DETAIL DESCRIPTION:

F-FRAME - 3 TIER

DESIGNED BY:	REVIEWED BY:
AJV	KL
DRAWN BY:	ISSUE DATE:
HAM	30 DEC 14

REVISIONS:

NO:	DESCRIPTION:	DATE:
A	ORIGINAL ISSUE	30 DEC 14

TYPICAL DETAIL NOMENCLATURE:

CT-F51-C

DRAWING NUMBER:	SHEET:
01	1/1

\\hilti.com\US\TEAMS\installations\Projects\TYPICALS\TYPICAL LIBRARY\CABLE TRAY (CT)\CAD\CT-F51-C.dwg, 12/31/2014 11:32:25 AM